This is a digital copy of a book that was preserved for generations on library shelves before it was carefully scanned by Google as part of a project to make the world's books discoverable online.

It has survived long enough for the copyright to expire and the book to enter the public domain. A public domain book is one that was never subject to copyright or whose legal copyright term has expired. Whether a book is in the public domain may vary country to country. Public domain books are our gateways to the past, representing a wealth of history, culture and knowledge that's often difficult to discover.

Marks, notations and other marginalia present in the original volume will appear in this file - a reminder of this book's long journey from the publisher to a library and finally to you.

Usage guidelines

Google is proud to partner with libraries to digitize public domain materials and make them widely accessible. Public domain books belong to the public and we are merely their custodians. Nevertheless, this work is expensive, so in order to keep providing this resource, we have taken steps to prevent abuse by commercial parties, including placing technical restrictions on automated querying.

We also ask that you:

+ *Make non-commercial use of the files* We designed Google Book Search for use by individuals, and we request that you use these files for personal, non-commercial purposes.

+ *Refrain from automated querying* Do not send automated queries of any sort to Google's system: If you are conducting research on machine translation, optical character recognition or other areas where access to a large amount of text is helpful, please contact us. We encourage the use of public domain materials for these purposes and may be able to help.

+ *Maintain attribution* The Google "watermark" you see on each file is essential for informing people about this project and helping them find additional materials through Google Book Search. Please do not remove it.

+ *Keep it legal* Whatever your use, remember that you are responsible for ensuring that what you are doing is legal. Do not assume that just because we believe a book is in the public domain for users in the United States, that the work is also in the public domain for users in other countries. Whether a book is still in copyright varies from country to country, and we can't offer guidance on whether any specific use of any specific book is allowed. Please do not assume that a book's appearance in Google Book Search means it can be used in any manner anywhere in the world. Copyright infringement liability can be quite severe.

About Google Book Search

Google's mission is to organize the world's information and to make it universally accessible and useful. Google Book Search helps readers discover the world's books while helping authors and publishers reach new audiences. You can search through the full text of this book on the web at `http://books.google.com/`

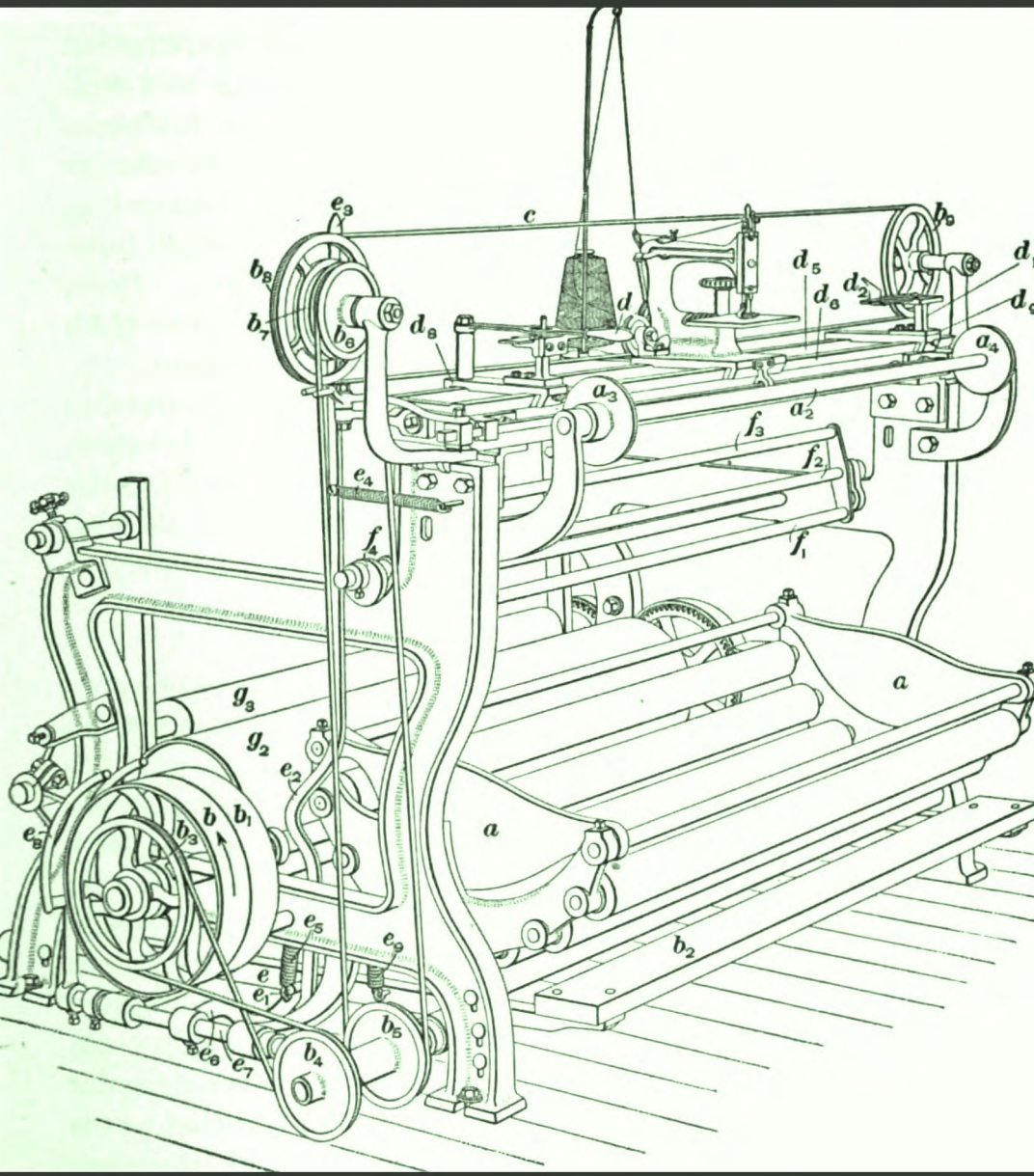

Yarns, cloth looms, mill engineering, reeling and baling, ...

International Library of Technology

Digitized by Google

K.F. WENDT LIBRARY
UW COLLEGE OF ENGR.
215 N. RANDALL AVENUE
MADISON WI 53706

Digitized by Google

Digitized by Google

Digitized by Google

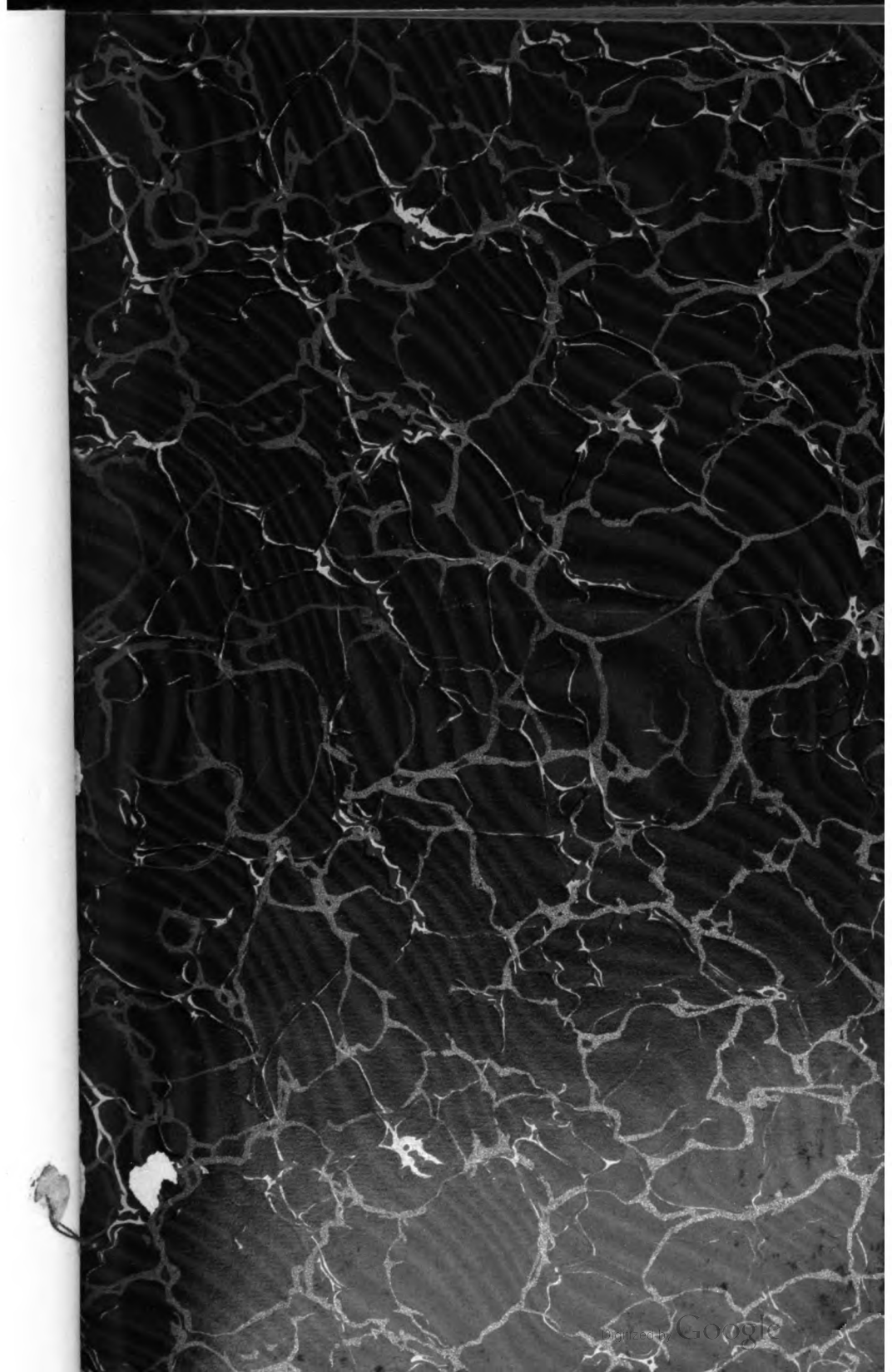
Digitized by Google

Digitized by Google

Digitized by Google

Digitized by Google

INTERNATIONAL LIBRARY OF TECHNOLOGY

A SERIES OF TEXTBOOKS FOR PERSONS ENGAGED IN THE ENGINEERING PROFESSIONS AND TRADES OR FOR THOSE WHO DESIRE INFORMATION CONCERNING THEM. FULLY ILLUSTRATED AND CONTAINING NUMEROUS PRACTICAL EXAMPLES AND THEIR SOLUTIONS

YARNS
CLOTH ROOMS
MILL ENGINEERING
REELING AND BALING
WINDING

SCRANTON:
INTERNATIONAL TEXTBOOK COMPANY
78

Digitized by Google

Copyright, 1906, by INTERNATIONAL TEXTBOOK COMPANY.

Entered at Stationers' Hall, London.

Yarns: Copyright, 1905, by INTERNATIONAL TEXTBOOK COMPANY. Entered at Stationers' Hall, London.

Cloth Rooms: Copyright, 1902, by CHRISTOPHER PARKINSON BROOKS. Copyright, 1905, by INTERNATIONAL TEXTBOOK COMPANY. Entered at Stationers' Hall, London.

Mill Engineering: Copyright, 1902, by CHRISTOPHER PARKINSON BROOKS. Copyright, 1905, by INTERNATIONAL TEXTBOOK COMPANY. Entered at Stationers' Hall, London.

Reeling and Baling: Copyright, 1905, by INTERNATIONAL TEXTBOOK COMPANY. Entered at Stationers' Hall, London.

Winding: Copyright 1905, by INTERNATIONAL TEXTBOOK COMPANY. Entered at Stationers' Hall, London.

All rights reserved.

89 PRINTED IN THE UNITED STATES.

Digitized by Google

104443
MAR 3 0 1907
SB
.IN82
78

PREFACE

The International Library of Technology is the outgrowth of a large and increasing demand that has arisen for the Reference Libraries of the International Correspondence Schools on the part of those who are not students of the Schools. As the volumes composing this Library are all printed from the same plates used in printing the Reference Libraries above mentioned, a few words are necessary regarding the scope and purpose of the instruction imparted to the students of—and the class of students taught by—these Schools, in order to afford a clear understanding of their salient and unique features.

The only requirement for admission to any of the courses offered by the International Correspondence Schools, is that the applicant shall be able to read the English language and to write it sufficiently well to make his written answers to the questions asked him intelligible. Each course is complete in itself, and no textbooks are required other than those prepared by the Schools for the particular course selected. The students themselves are from every class, trade, and profession and from every country; they are, almost without exception, busily engaged in some vocation, and can spare but little time for study, and that usually outside of their regular working hours. The information desired is such as can be immediately applied in practice, so that the student may be enabled to exchange his present vocation for a more congenial one, or to rise to a higher level in the one he now pursues. Furthermore, he wishes to obtain a good working knowledge of the subjects treated in the shortest time and in the most direct manner possible.

Digitized by Google

In meeting these requirements, we have produced a set of books that in many respects, and particularly in the general plan followed, are absolutely unique. In the majority of subjects treated the knowledge of mathematics required is limited to the simplest principles of arithmetic and mensuration, and in no case is any greater knowledge of mathematics needed than the simplest elementary principles of algebra, geometry, and trigonometry, with a thorough, practical acquaintance with the use of the logarithmic table. To effect this result, derivations of rules and formulas are omitted, but thorough and complete instructions are given regarding how, when, and under what circumstances any particular rule, formula, or process should be applied; and whenever possible one or more examples, such as would be likely to arise in actual practice—together with their solutions—are given to illustrate and explain its application.

In preparing these textbooks, it has been our constant endeavor to view the matter from the student's standpoint, and to try and anticipate everything that would cause him trouble. The utmost pains have been taken to avoid and correct any and all ambiguous expressions—both those due to faulty rhetoric and those due to insufficiency of statement or explanation. As the best way to make a statement, explanation, or description clear is to give a picture or a diagram in connection with it, illustrations have been used almost without limit. The illustrations have in all cases been adapted to the requirements of the text, and projections and sections or outline, partially shaded, or full-shaded perspectives have been used, according to which will best produce the desired results. Half-tones have been used rather sparingly, except in those cases where the general effect is desired rather than the actual details.

It is obvious that books prepared along the lines mentioned must not only be clear and concise beyond anything heretofore attempted, but they must also possess unequaled value for reference purposes. They not only give the maximum of information in a minimum space, but this information is so ingeniously arranged and correlated, and the

Digitized by Google

indexes are so full and complete, that it can at once be made available to the reader. The numerous examples and explanatory remarks, together with the absence of long demonstrations and abstruse mathematical calculations, are of great assistance in helping one to select the proper formula, method, or process and in teaching him how and when it should be used.

This volume deals with the following subjects: Yarns and their classifications, based on such characteristics as the material of which they are made, their appearance, their counts, their forms, or the purposes for which they are intended. Cloth rooms, in which the cloth passes through the processes of checking, inspecting, and finishing, before being delivered to the trade. Detailed descriptions are given of sewing, rolling, brushing, shearing, folding, measuring, and stamping machines. Finally, consideration is given to the processes that precede the shipment of the cloth, such as baling and boxing. The subject of inspection, as to aims and means, is fully treated. In the part dealing with mill engineering, a variety of important subjects is taken up, beginning with the selection of a mill site, preparation of the ground, etc., and continuing with descriptions of foundations, walls, and interior construction, power plant, heating, ventilation, lighting, and fire protection. The volume concludes with specifications of the equipment required, and calculation of production.

The method of numbering the pages, cuts, articles, etc. is such that each subject or part, when the subject is divided into two or more parts, is complete in itself; hence, in order to make the index intelligible, it was necessary to give each subject or part a number. This number is placed at the top of each page, on the headline, opposite the page number; and to distinguish it from the page number it is preceded by the printer's section mark (§). Consequently, a reference such as § 16, page 26, will be readily found by looking along the inside edges of the headlines until § 16 is found, and then through § 16 until page 26 is found.

INTERNATIONAL TEXTBOOK COMPANY

Digitized by Google

Digitized by Google

CONTENTS

YARNS	Section	Page
Yarns From Vegetable Fibers	43	1
Classification of Yarn	43	2
Cotton Yarns	43	8
Yarns From Stem Fibers	43	39
Linen Yarns	43	39
Hemp Yarns	43	42
Jute	43	43
Ramie Yarns	43	43
Yarns From Leaf Fibers	43	44
Fruit Fibers	43	44
Yarns From Animal Fibers	44	1
Woolen and Worsted Yarns	44	1
Yarns Produced From Hair	44	21
Silk Yarns	44	22
Yarns From Mineral Fibers	44	27
Yarns With Special Characteristics	44	28
Conditioning Yarns	44	34
Varieties of Regular Yarn Resulting From Coloring	44	36
Novelty Yarns	44	40
CLOTH ROOMS		
Cloth-Room Processes and Machinery	68	1
Cloth Checking	68	7
Sewing and Rolling	68	9
Brushing and Shearing	68	22
Calender Rolling Machine	68	36
Trimming and Inspecting Machines	69	1
Folding and Measuring	69	6
Measuring Attachments	69	19

Digitized by Google

CLOTH ROOMS—*Continued*	*Section*	*Page*
Stamping	69	19
Preparation for Shipment	69	22
Shipment in Rolls or Cases	69	27
Cloth Inspection	69	28
MILL ENGINEERING		
Mill Construction	87	1
Selection of a Mill Site	87	1
Excavations	87	5
Character of Soil	87	5
Foundations	87	10
Piling	87	19
Brickwork Above the Foundation	87	30
Bricks and Brickmaking	87	30
Bricklaying	87	36
Brick Piers	87	49
Chimneys	87	50
Stone Trimmings	87	53
Interior Construction	87	54
Slow-Burning Construction	87	54
Power Plant	88	2
Steam Power	88	2
Boilers	88	2
Steam Engines	88	26
Water Power	88	40
Turbines	88	41
Heating, Ventilating, and Lighting	88	53
Fire Prevention and Protection	88	68
Plumbing and Water Supply	88	78
Cotton-Mill Planning	89	1
Organization	89	4
Machinery Equipment	89	8
Layout of Machinery	89	22
Mill Supplies	89	25
REELING AND BALING		
Reeling	92	1
Reels	92	2

Digitized by Google

	Section	Page
REELING AND BALING—*Continued*		
Tying	92	14
Special Motions	92	17
Doffing	92	19
Knotting	92	22
Calculations	92	24
Management	92	25
Bundling and Baling Reeled Yarns	92	26
WINDING		
Tube Winding	93	1
Quick-Traverse Drum Winders	93	3
Spindle Winders	93	17
Management	93	26
Back Winding for Weaving Yarns	93	31

Digitized by Google

Digitized by Google

YARNS

(PART 1)

YARNS FROM VEGETABLE FIBERS

INTRODUCTION

1. The word **yarn** is one of the best known in the textile trades of all English-speaking nations and is used to indicate a continuous strand, spun or otherwise produced from natural fibrous substances, whether vegetable, animal, or mineral; as, for instance, cotton yarn, woolen yarn, asbestos yarn, and so on. Though the term is applied commonly to all fibrous threads, it is more accurately applied to yarns in bulk, or to a quantity of strands or threads, than to small pieces or single lengths of thread. When threads are considered singly, each one is more frequently spoken of as an *end*, as, for example, the expressions *broken end*, *two ends in a dent;* but even in this case it is an end of yarn that is meant. One possible exception is that sewing, embroidery, and such threads, which consist of several ends of yarn twisted together, are usually spoken of as *thread* instead of yarn. The use of the word thread in the sewing-thread and kindred trades instead of the word yarn differs from the custom in many other branches of textile yarn manufacturing where the yarn, even when several ends are twisted together, is still spoken of as yarn. Still another exception is in the case of the various kinds of cordage, which, although technically are continuous strands of fibrous materials, cease to be

For notice of copyright, see page immediately following the title page

Digitized by Google

spoken of as yarn when made up into the form of twines, cords, and ropes owing to their thickness as compared with ordinary yarns. Aside from the exceptions named, the word yarn may be considered as applying to all strands or threads made from fibrous substances.

The word yarn is derived from the Anglo-Saxon word *gearn* and bears resemblance to *garn* in the German, Swedish, and Danish languages, which also has the same meaning. These words probably all came from the Teutonic name for yarn, or string, and are allied to the Greek χορδή (chordé), meaning a string, originally one made from the intestines (χολάδεξ—choládez) of animals, which was one of the earliest filaments used by man. It is from χορδή that we have the English word cord.

In its most perfect form, yarn is cylindrical, of the same diameter and evenly twisted, with the same number of turns per inch, throughout its length, and of a uniform strength at all points. Either from the nature of the fiber, from intentionally different construction, or from defective material or manufacture, some yarns do not attain this standard of perfection, but vary in evenness and in strength.

CLASSIFICATION OF YARN

2. Drawn and Condensed Yarns.—The subject of yarns, when dealt with generally, opens up a very wide field and various methods of classification so that the subject may be intelligently considered. Not only do the series of processes for preparing yarns vary according to the material that is to be operated on, but different series of machines or processes are often used even for the same material. Although each series of machines produces yarn different in some respect from yarns produced by other series of processes, all yarns, of whatever material, may be classified in two main divisions, according to their structure; namely, *drawn yarns* and *condensed yarns.* **Drawn yarns** are those in which all fibers are laid parallel, with the ends overlapping one another, which, since the yarn is twisted while in this

Digitized by Google

condition, produces a series of parallel spirals. This method of producing yarn depends on the principle of roll drawing, and such yarns may be described as *drafted* or *multidrafted* yarns. It is by far the larger class of yarn, including most cotton yarns, all worsted yarns, and many others.

The second class—**condensed yarns**—consists of those yarns in which the fibers do not all lie parallel, overlapping one another, but are crossed and laid without any regular order. These yarns are produced by arranging the fibers in loose ribbons at the carding process, rolling these ribbons into roving by a condenser, and completing the operation of spinning with a slight drafting operation between the rolls and spindles of the mule, at which time the twist is also inserted.

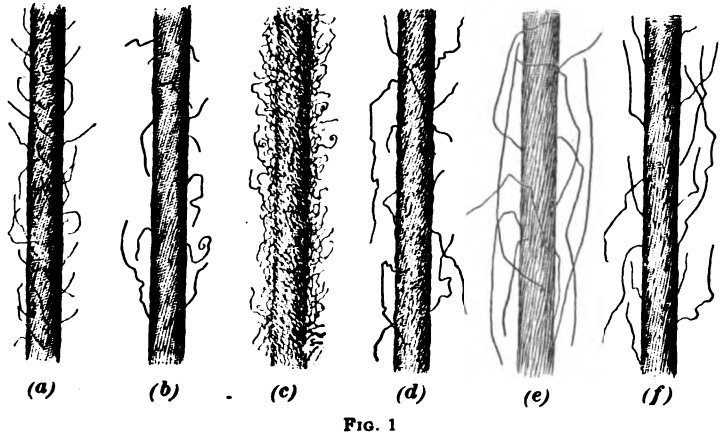

FIG. 1

As the fibers are laid in the thread without regard to their parallelism, such yarns have not the strength of drawn yarns of the same thickness; condensed yarns also have a rougher surface and a more oozy construction, owing to the fact that many of the fibers project from the surface of the yarn.

The appearance of several typical yarns, when magnified, is shown in Fig. 1, where (*a*) represents a single cotton yarn; (*b*), a single flax line yarn (linen); (*c*), a single woolen yarn; (*d*), a single worsted yarn; (*e*), a single mohair yarn; and (*f*), a single spun silk yarn. The parallel, spiral

Digitized by Google

formation is shown in (*a*), (*b*), (*d*), (*e*), (*f*), and the irregularly arranged, crossed formation of the fibers in (*c*). This means of classifying yarns into drawn or condensed yarns is a purely academic one, not obtaining to any large extent in practical mill work; but nevertheless it is an excellent theoretical division.

3. Classification According to Material.—One of the most common classifications of yarns, which is simple and easily made, is according to the material from which the yarns are manufactured. These may first be divided into the three divisions: (1) *vegetable*, (2) *animal*, and (3) *mineral substances*. If vegetable fibers, they may be subdivided according to the portion of the plant from which they are taken: (1) fibers from seeds, (2) fibers from the stem of the plant, (3) fibers from leaves, and (4) fibers from the fruit of the plant.

1. *Vegetable Fibers.*—Seed fibers are represented principally by cotton. Fibers from the stems of plants are flax, hemp, jute, and China grass, ramie, or rhea. Fibers from the leaves of plants are Manila hemp, sisal, and aloe fiber. Fiber from fruit is represented by coconut fiber, or coir. From all these substances yarn can be made, but there are other vegetable materials that are sometimes used for weaving and similar purposes, such as straw, cane, strips of wood or bark of trees, rubber, etc., from which yarn is not made and which will be ignored in this Section.

2. *Animal Fibers.*—Yarns are produced from animal fibers that form the natural covering of certain mammals and have been sheared or clipped from the bodies or pulled from the skins. These fibers consist of a large number of separate filaments varying in length, strength, fineness, waviness, pliability, softness, elasticity, and luster, and may be subdivided into wool and hair, although in some animals the division is difficult to determine, for wool is really a fine, wavy hair. Wool, however, is generally considered as referring exclusively to the fiber obtained from the sheep. The hair materials are mohair (the fleece of the Angora goat),

Digitized by Google

the fleece of the Cashmere goat, the alpaca, and the vicugna, which, although hair, have much resemblance to wool; also the strictly hair materials, free from waviness commonly considered a feature of true wool, such as goat hair, camel hair, horse hair, cow hair, and the various furs, including cat, rabbit, and hare. Both wool and hair lend themselves, especially in the case of wool, to the manufacture of yarn, which is not the case with the stiffer hairs known as bristles and spines.

A third class of animal fiber is known as silk, which is the exudation of the silk worm. This is divided into natural silk, of which there are two varieties—true and wild—and artificial silk, although this more naturally comes under the vegetable class, as it is produced from vegetable matter.

3. *Mineral fibers* is a small class of thread material, consisting principally of asbestos, glass, and metals.

It is not intended that the foregoing list should be considered complete, as for special purposes other materials are used in small quantities for yarns, and new fibrous substances are constantly being discovered and used for textile purposes. Many of the materials mentioned are of little importance to the ordinary textile student, but others, such as cotton, linen, wool, and silk, are of great importance and require careful study. Under the modern conditions of textile manufacturing, it is not sufficient for a student to have a knowledge of yarn manufactured from one material or one variety of material alone; there is a tendency for one branch of manufacture to merge into another. Designers are often called on to use yarns of more than one material, size, structure, or value in the fabric being designed; a manufacturer of cloth or knit goods is often required to utilize more than one size, structure, or value of yarns, or to incorporate into one fabric yarns made from different materials; a yarn-mill superintendent may be called on to imitate yarns made from some other material than the one from which he has to produce a yarn. The modern millman is therefore expected to have some knowledge of other yarns than those actually used or produced in the mill with which he is connected.

Digitized by Google

The widest knowledge of yarn is required by those engaged in preparing yarns for the market, in dealing in yarns—either selling or buying them—or in converting yarns by various processes so as to change their appearance or construction, or in combining threads to give special effects.

4. The largest proportion of the yarns produced in most of the textile industries is utilized for weaving purposes, usually by the firm that spins them. Another large percentage is intended for knitting mills. Other yarns are utilized for such purposes as sewing or embroidery thread, lace making, rope and twine making, and electric-wire covering.

Yarns for thread are usually spun by the firm making the thread, but for the other purposes the yarns are often purchased. In some cases, weaving mills buy their yarns; in most cases, knitting mills buy their yarns; and even knitting mills, weaving mills, or thread mills either buy a portion of the yarns they use or sell a portion of their yarn production according to the conditions of the market or for other reasons. Almost every mill making fancy goods at times requires to purchase novelty or special yarns, the production of which is a feature of certain yarn mills possessing the necessary machinery and employing help skilled in such work. Similarly, yarns that are put up in special form or that are dyed, bleached, printed, mercerized, polished, or otherwise prepared are sold to firms requiring the same. Often these processes are conducted in the mill in which the yarns are to be used. The uses found for yarns are increasing every year and it often requires some special method of preparation or handling to prepare them for the purposes for which they are intended. Thus, in the aggregate, the trade in yarns is of large proportions, and requires an expert knowledge on the part of those dealing in them—either as buyers, sellers, or agents.

5. A brief description will be given of the yarns that are produced from each of the principal materials, and some attention paid to their identification and the forms in which they are put up, the purposes for which they are intended,

Digitized by Google

and the effects of the processes through which they are passed after spinning, some of which change the appearance of the yarn, some of which combine threads, while others are intended to put up the yarn in various forms for convenience in transportation or to facilitate the operation of the next process. It is not intended to describe the manufacture of the yarn, but rather to refer to the leading types of yarns as they are placed on the market.

The great variety of yarns used for a large number of processes renders their classification and accurate description a matter of some difficulty. The correct word to use in their description is sometimes difficult to select owing to the fact that the same word may have a different meaning in different textile industries and even in the same industry as conducted in different districts or different countries; as far as practicable, however, these different meanings will be explained. When the counts, or numbers, of yarns are given, they refer to the standard numbering of yarns made from the material under description in each case.

In the case of yarns made from the more important materials, the following general classification will be made, as nearly as possible, in the order given; but for yarns that are less frequently met with a briefer description will be considered sufficient: (1) the material; (2) the various classes of material and the numbers made from each, including the various qualities, growths, or varieties of the material and its suitability for various yarns; (3) the classification of the yarns according to the method of their preparation, which is occasionally found to vary even in yarns made from the same material; (4) the appearance of the thread, which may vary according to the kind of material used, the method of its preparation, or its treatment after spinning; (5) forms in which the yarn is put up for the market or for a succeeding process; (6) the general purposes for which the yarn is used.

Digitized by Google

COTTON YARNS

CLASSIFICATION ACCORDING TO VARIETIES OF RAW MATERIAL

6. Cotton yarns are those made from the seed fibers of the cotton plant, which belongs to the botanical genus *Gossypium*, of which there are a number of species. The genus Gossypium belongs to the order of *Malvaceæ*. The principal species cultivated for commercial purposes are the *Gossypium herbaceum*, *Gossypium Barbadense*, and the *Gossypium arboreum*. The species known as Gossypium herbaceum grows to a height of from 2 to 6 feet and, like most species of the cotton plant, is an annual, having to be planted each year. It is found largely in northern Africa, Asia, and in the United States of America. The Gossypium Barbadense is a shrub, but attains a height of from 5 to 10 feet; this is also an annual. It produces the longest cotton fiber known and is largely cultivated in the sea islands off the coast of South Carolina and Georgia. The Gossypium arboreum is not of much importance commercially, but is interesting from the fact that it grows to a height of from 15 to 20 feet; the fiber thus derives the name of *tree cotton*. It is a perennial, thus distinguishing it from other species of the cotton plant. While this plant is occasionally found in Asia, it is most largely met with in Central and South America.

Cotton fiber is known to commerce simply under the name of *cotton* in English-speaking countries, although by some people it is spoken of as *cotton wool*. Its German name is *baumwolle;* in French its name is *coton;* in Spanish, *algodon;* and in Italian, *cotóne*.

The botanical classification of cotton is not used commercially, but a geographical classification has been made, which has also been extended to cover the yarns made from such cotton—as, American cotton yarns, Egyptian yarns, Peruvian yarns, Surat yarns—with subdivisions derived either from the name of the seed from which the plant is grown, such as Allan-seed, which is a variety of American cotton, or local

Digitized by Google

names, such as Peelers, uplands, and bowеds, which are also varieties of American cotton. It must be understood that the names given in this classification refer to the cotton from which the yarn is made and not the country in which the yarn is spun; thus, Egyptian yarn means yarn spun from cotton grown in Egypt, notwithstanding the fact that the yarn itself may be made in America, England, Japan, or other countries.

7. Yarns From American Cotton.—1. *American cotton yarns* are usually understood to be those produced from the more common varieties of cotton grown in the United States of America, of short and medium staple, and excluding yarns produced from sea-island, Peeler, and Allan-seed cottons, which although they are American, usually give a distinct trade name to the yarns produced from them. American cotton yarns are usually of low and medium numbers, not usually exceeding 40s for the warp or 70s for the filling, and generally spun in much lower numbers. They are almost white in color.

2. *Sea-island yarns* are produced from the long-staple sea-island cotton grown on the islands off the coast of South Carolina and Georgia and, to some extent, on the mainland in districts near the ocean, especially in Florida. Sea-island yarns are almost always fine yarns, from 100s to 400s, although they are sometimes spun for special purposes into low and medium numbers. They are white in appearance and smooth and silky.

3. *Peeler yarns* are produced from a long-staple cotton grown principally in districts near the Mississippi River. Peeler yarns are spun as high as 80s or 90s and from this downwards. They have a very white appearance.

4. *Allan-seed yarns* are produced from American cotton grown from Allan seed; the description of Peeler yarns applies largely to these.

8. Egyptian yarns are prepared from cotton grown in Egypt, and when examined in the natural state can be readily distinguished from most other yarns by their brownish color.

Digitized by Google

They are commonly spun as high as 100s, and even occasionally up to 150s, but are often made into lower numbers, especially for hosiery purposes; as the fibers are very strong in proportion to their size and are long and silky, they enable a solid, strong thread to be made. On the continent of Europe, Egyptian yarns are generally spoken of as Mako, or Maco, yarns, especially in Germany.

9. Peruvian cotton yarns are not spun to any large extent. They are found, however, in coarse numbers from 10s to 20s, although the staple of the cotton is long enough to enable finer numbers to be made. There is more than one variety of Peruvian cotton, but the one chiefly used is known as rough Peruvian and has a harsh feel; it is not so white as the American cotton nor so brown as some of the Egyptian cottons. The yarn made from this cotton exclusively is harsh, woolly feeling yarn, with a brownish appearance. The principal use of Peruvian cotton, on account of its length of staple and harsh feel, is as an adulterant for mixing with wool for the production of merino or similar yarns.

10. Surat yarns are those made from East Indian cotton. Its many varieties are of short staple, and much of it is dirty and of a brownish color, so that when used alone it is made into yarns coarser than 20s, which in most cases have a dirty-white appearance. It is not usually spun alone except in India, although some of it is still used in England and on the continent of Europe, either alone or mixed with short American cotton.

11. Chinese and Japanese yarns, when spun alone, are like Surat yarn, except that both the Chinese and Japanese cottons are cleaner and whiter than the Indian cotton and produce yarn of a better appearance.

12. Many other varieties of cotton yarns could be mentioned, such as those made from Brazilian cotton, Turkestan cotton, West Indian cotton, Smyrna cotton, Bourbon cotton; but with the exception of the Brazilian and Turkestan cottons, these are not of much commercial importance as

Digitized by Google

a rule, being spun only in the countries in which the cotton is grown or in the country of which the one in which it is grown is a dependency. When such cottons are exported to other countries they are as a rule not used alone, but are mixed with other cotton, principally with American, of about the same length of staple. The only yarns spun in the United States of America from imported cottons are Egyptian and Peruvian yarns.

This comprises the list of the principal varieties of cotton yarn as indicated by the name of the cotton from which it is spun. In some cases, however, yarn is produced from a mixing composed of two or more growths of cotton; in this case the yarn is usually named for the variety forming the larger proportion of the mixing; for instance, when a small proportion of Brazilian cotton is blended with American cotton in order to increase the strength of the yarn, the product is still called an American yarn; when American cotton is added to Egyptian for the sake of economy, the product is called an Egyptian yarn, or Maco; or when Indian cotton is used with American in order to cheapen the mixing, the yarn receives the name of American.

CLASSIFICATION OF COTTON YARNS ACCORDING TO THEIR PREPARATION AND APPEARANCE

13. Single Drawn Yarns.—1. Almost all cotton yarns belong to the class of drawn yarns, being produced by the sequence of processes comprising picking, carding, drawing frames, fly frames, and spinning, and any yarn described as cotton yarn without any other qualification, may be considered as being produced by these ordinary processes. Drawn cotton yarns, however, may be subdivided, according to the method of treatment of the stock before spinning, into two classes—*carded* and *combed yarns;* also, according to the methods of spinning, into *mule yarns*, *ring yarns*, or *throstle yarns*.

The processes required for making all cotton yarns up to and including carding are substantially the same, and when the stock is afterwards passed through drawing frames,

Digitized by Google

slubbing frames, and roving frames, and the spinning process, it is described as a **carded yarn.** If, however, the combing process is inserted between the carding and the drawing, the yarn is described as a **combed yarn.** The combing process removes short fibers, neps, and small particles of foreign matter and is ordinarily used in those cotton mills producing fine yarns, and sometimes for coarse and medium yarns that must be of exceptional strength or cleanliness. Combed yarns can usually be distinguished from carded yarns of the same number by their cleanliness and their smooth, silky appearance. To summarize, all cotton yarns are carded, but only a small proportion are combed.

Combing is being introduced to a greater extent every year, and the proportion of combed yarns produced is increasing. In yarn dealing, the word carded or combed is usually prefixed to the description of yarns being sold; as, for instance, carded Egyptian means yarn spun from Egyptian cotton that is not combed; combed Peeler yarn means yarn spun from Peeler cotton that has been both carded and combed.

Cotton yarn is the common name in all English-speaking nations for yarns produced from cotton. The German name is *baumwollengarn;* the French name is *fil de coton;* the Italian name is *filo di cotône.* The German name for carded yarn is *streichgarn*, and for combed yarns is *kammgarn;* the French name for carded yarn is *fil cardé*, and for combed yarn, *fil peigné.*

2. *Mule-Spun, Ring-Spun, and Throstle Yarn.*—Either carded or combed cotton yarns may be spun in three different ways, giving the three classifications of mule-spun, ring-spun, and throstle yarns. **Mule-spun yarns** are those that have been spun on a mule, in the form of a cop. **Ring-spun yarns** are those that have been spun on a ring frame, ordinarily on a wooden, but sometimes on a paper, bobbin. **Throstle yarns,** according to the strict interpretation of the term, are now only found in Europe in a few districts; they comprise those spun on a throstle spinning frame on the flyer principle and are made on a bobbin with a double head. In England, owing to the fact that the ring frame is

Digitized by Google

supplanting the throstle frame, it is quite common to speak of ring-spun yarns as ring-throstle yarns or merely as throstle yarns. Strictly speaking, this is an erroneous term, but it is one that is largely in use; ring-spun yarn, or ring yarn, is the more accurate name.

When cotton yarns are examined in the form in which they leave the spinning machine, they can easily be identified, according to whether they are in the form of a cop, a ring bobbin, or a throstle bobbin, but it is more difficult to identify the class to which a cotton yarn belongs after it has been wound into some other form. Generally speaking, coarse and medium weaving yarns in America may be considered as being ring-spun. Fine weaving yarns, especially for filling, are generally mule-spun. Hosiery yarns are almost always mule-spun.

In determining the classification by an examination of the yarn itself, mule-spun yarn can sometimes be identified by its being more elastic and more even than ring-spun yarn, and if yarn is very soft and slackly twisted, it is almost certainly mule-spun. Ring yarn is usually harder twisted and not so even as mule-spun yarn. Throstle yarn has a more nearly round, and a very even, thread.

These descriptions of the differences between the yarns are not absolute, for other conditions occurring during the preparation of the roving may produce an effect that cannot be attributed to the mode of spinning.

3. *Waste-Cotton Yarns.*—The waste produced from the various cleaning processes in cotton-yarn preparation is frequently respun and the material again put through the picking, carding, fly frame, and spinning processes, the number of operations being reduced as compared with the ordinary list of processes. These yarns are usually spoken of as **waste yarns** and are always of coarse numbers, usually not exceeding 8s and often much coarser; they are readily identified by being dirty, weak, uneven, and composed of short-staple material. When the waste yarns are prepared in this way they still come under the class of drawn yarns.

Digitized by Google

14. Condensed Yarns.—A small proportion of yarn made from cotton, cotton waste, or from a blend of waste and good cotton comes under the classification of condensed yarns. Up to and including the carding process their manufacture is similar to that of drawn cotton yarns, but the material is removed from the card in numerous small ribbons, or slivers, wound on a bobbin. These bobbins are taken to a specially constructed mule and the yarn spun directly from them, the required size being attained by drawing out the end between the rolls and the spindle at the same time that the stock is being twisted.

Condensed yarns are always carded and mule-spun yarns, and are never combed yarns, nor ring- nor throstle-spun. This class of yarn is sometimes spoken of as *wool-spun cotton yarn*, from the fact that the process of manufacture resembles woolen-yarn manufacture. It is also called *imitation yarn*, from the fact that it is produced in order to imitate woolen yarn, and occasionally is called vigogne (vigonia), or imitation vigogne, from the fact that it was first manufactured, in French-speaking countries, to imitate yarns spun from the wool of the vicugna, the French name for which is *vigogne*.

The statement that condensed cotton yarns are always mule-spun ought to be modified, because in Belgium and Germany a continuous-spinning machine is built and used to spin yarn from the card slivers or ribbons on a principle differing from that of the mule. This is used to so small an extent, however, that it is not of much commercial importance and can be ignored.

15. Ply Yarns.—1. All the yarns heretofore mentioned are single yarns; that is, one strand comprises the thread, which if untwisted, resolves itself into loose fibers. All cotton yarns leave the spinning process in the form of single yarn. For certain purposes, it is necessary to combine two or more of these single yarns into one thread, making what is called in the American cotton trade **ply yarn**, and in the English cotton trade **folded yarn**, or, more specifically, *two-fold yarn*, *three-fold yarn*, etc.

Digitized by Google

The uniting of these single yarns is performed in three different ways: (1) On a machine constructed on the ring-spinning principle, known as a *twister* in the United States or a *doubler* in Europe; (2) on a machine constructed on the flyer-throstle principle, known as a *flyer doubler*, used principally in Europe; (3) on a machine constructed on the mule principle, known as a *twiner*, used only in Europe. *Dry-twisted yarns* are combined without the application of moisture; *wet-twisted yarns* are moistened at the twisting process.

Ply yarn is composed of the necessary number of single yarns usually twisted together in the opposite direction to that in which the twist is inserted in the single yarn; that is, if the single yarn was twisted to the right, the ply yarn is twisted to the left, and vice versa. Two-ply and 3-ply yarns are the varieties most commonly used, although 4- and 6-ply are sometimes made. It is easy to identify ply yarns from single yarns by determining whether the yarn is composed of one strand or more than one.

The German name of ply yarn is *doublirtgarn* or *zwirngarn;* the French name is *fil plié.*

2. *Twist Yarns.*—When ply yarns are made from two colors of single yarns, they are usually spoken of as **twist;** thus, a black and a white thread when twisted together make a *black-and-white twist*, or a blue and a white thread twisted together make a *blue-and-white twist*, thus producing a mottled appearance. The English name for this yarn is *grandrelle.* The word twist in the English cotton trade has a different meaning from the same word as used in the United States; in England it is used to indicate cotton warp yarn in the same sense as the word warp in America.

3. *Cable Yarns.*—For a few purposes, two or more ply threads are cabled, or twisted, together in the opposite direction from the ply twist, making what is known as *cable yarn*, or *cable cord*, or more briefly, *cord.* For instance, suppose that 9-ply 60s were required to be made from single yarn spun with right-hand twist, 3 threads of 60s would be twisted to the left, making 3-ply yarn, and

Digitized by Google

3 of these yarns would again be twisted, this time to the right, making 9-ply-cable yarn, or 60s nine cord.

16. All the cotton yarns that have been mentioned are spun in their natural state, and when spun from American, sea-island, Chinese, Turkestan, or some kinds of Indian cottons, the yarn is almost white; when spun from Brazilian, some kinds of Peruvian, some kinds of Indian cottons, or from Egyptian, the yarn is of a brownish tint, varying from a yellowish brown to a light brown. Yarn that is spun from cotton in its natural state, unbleached or undyed, or cloth that is woven from such yarn, is usually spoken of, in America, as *brown* cotton yarn or cloth. In the Lancashire district of England, it is spoken of as *gray* cotton yarn or cloth; but in the Midland district of England, where knitting is conducted, it is spoken of as *brown* cotton yarn. The expression *white* cotton yarn or cloth is usually applied only to yarn or cloth that has been bleached.

The above description includes practically all cotton yarns that are produced in any quantity for commercial purposes, but ignores yarns that are composed wholly or in part of fibers that have been bleached or dyed before spinning, or those of special construction produced in what is known as the novelty-yarn trade; these comprise only a small proportion of cotton-yarn production. No attention has been given to the numerous processes through which yarn can be passed after the spinning and twisting to change its appearance, nor to the different forms into which yarn can be placed in readiness for the market.

CLASSIFICATION OF COTTON YARNS ACCORDING TO COUNTS

17. Yarns are frequently spoken of as *fine*, *medium*, or *coarse*, but it is difficult to give an exact definition of what should be comprised under each division, for they are relative terms and their meaning varies even in different branches of the same yarn industry. A manufacturer of combed sea-island yarns would consider 30s coarse, while a spinner of waste-cotton yarns or a manufacturer of cotton blankets

Digitized by Google

would consider it fine. In order that there may be some general definition given of these terms, it may be stated that, in general, cotton yarns are considered coarse up to 30s; from 30s to 60s they are referred to as medium numbers; and from 60s upwards, as fine yarns. Cotton yarns much finer than 200s are not in common use in the United States, but English cotton spinners are regularly making yarns from 200s to 400s, while for experimental purposes cotton has been spun very much finer than this.

Sometimes names of more or less local character are given to cotton yarns as a means of classifying them according to their numbers. Thus, for instance, the term *candle-wick yarns*, while it formerly had a different meaning, is now used to indicate waste yarns of very coarse numbers, so coarse that they are numbered by the yards to the ounce rather than by the hanks to the pound. The word *bump* is also applied to yarns of low counts in general, the name alluding to the rebound or concussion in the loom when these yarns are used for filling and the reed is beaten up against them. The word *rove* is used in the sense of rove yarns to indicate coarse yarns, usually made from a good quality of cotton and well carded, but which are of such low counts as to resemble roving, although rove yarns are sold in the cop or skein. *Lace yarn* is a term sometimes used to indicate fine numbers of ply yarns, even when they are not intended for use in the manufacture of lace.

These four terms are more particularly used in Great Britain, the names candle wick and bump being used in Lancashire, while rove yarns and lace yarns are Scotch expressions.

CLASSIFICATION OF COTTON YARNS ACCORDING TO THE FORMS IN WHICH THEY ARE PUT UP

18. Cops.—Single yarn as it leaves the spinning machine is in the form of a *cop* or *bobbin*, and in very many cases must have this form changed, either in order to continue the process of manufacture or to be put into suitable form for transportation. A **cop** is a cylindrical coil of yarn with

Digitized by Google

cone-shaped ends, the lower end being called the *cop bottom* and the upper end the *cop nose;* it is produced on the various forms of cotton mules and is sometimes spoken of as a *mule cop*, but more often simply as a cop. It can be made self-contained by means of the method of winding, which builds up the yarn on the bare spindle of the mule sufficiently firm to be handled after removal without requiring any central support. In this case the cop bottom is formed by covering a few closely wound layers of yarn with other open layers used as a binding thread, and covering this portion with paste. More commonly, especially in America, the cop is built on a tube of paper, which may be a *short tube*, slightly over 1 inch in length; a *long tube*, 2 or 3 inches long; or a *through tube*, which is longer than the cop itself. About $\frac{3}{8}$ inch of the tube, in all cases, projects below the bottom of the cop, the remainder being covered with yarn, except in the case of through tubes, which project beyond both top and bottom. The tube, of course, is placed on the spindle before the cop is spun, and the yarn wound on it.

Views of various styles of mule cops and tubes are shown in Fig. 2; (*a*) is a filling cop, often called a *pin cop*, spun without a tube; (*b*) is a mule warp cop without tube; (*c*) is a knitting-yarn cop on a long tube; (*d*) is a larger size of filling cop on a short tube, often called a *bastard cop*, as it is neither the size of a pin cop nor a warp cop; (*e*) is a large filling cop on a through tube, a size used for condensed yarns. Various styles of short tubes are shown in (*f*), long tubes in (*g*), and through tubes in (*h*). Sometimes tubes are perforated, as shown in (*i*), a long tube, and (*j*), a through tube, in order to facilitate cop dyeing and bleaching; (*k*) is a cop skewer, which may be made of hardwood or steel, and is used for holding cops for safe handling or unwinding. Pin cops are about $\frac{3}{4}$ inch in diameter and 5 inches long; bastard cops, 1 inch in diameter and $6\frac{1}{2}$ inches long; warp cops, $1\frac{1}{4}$ inches in diameter and 7 inches long; hosiery cops, $1\frac{3}{4}$ inches in diameter and 8 inches long; cotton-waste yarns are spun into cops occasionally as large as $2\frac{1}{2}$ inches in diameter and 11 inches long. These are

Digitized by Google

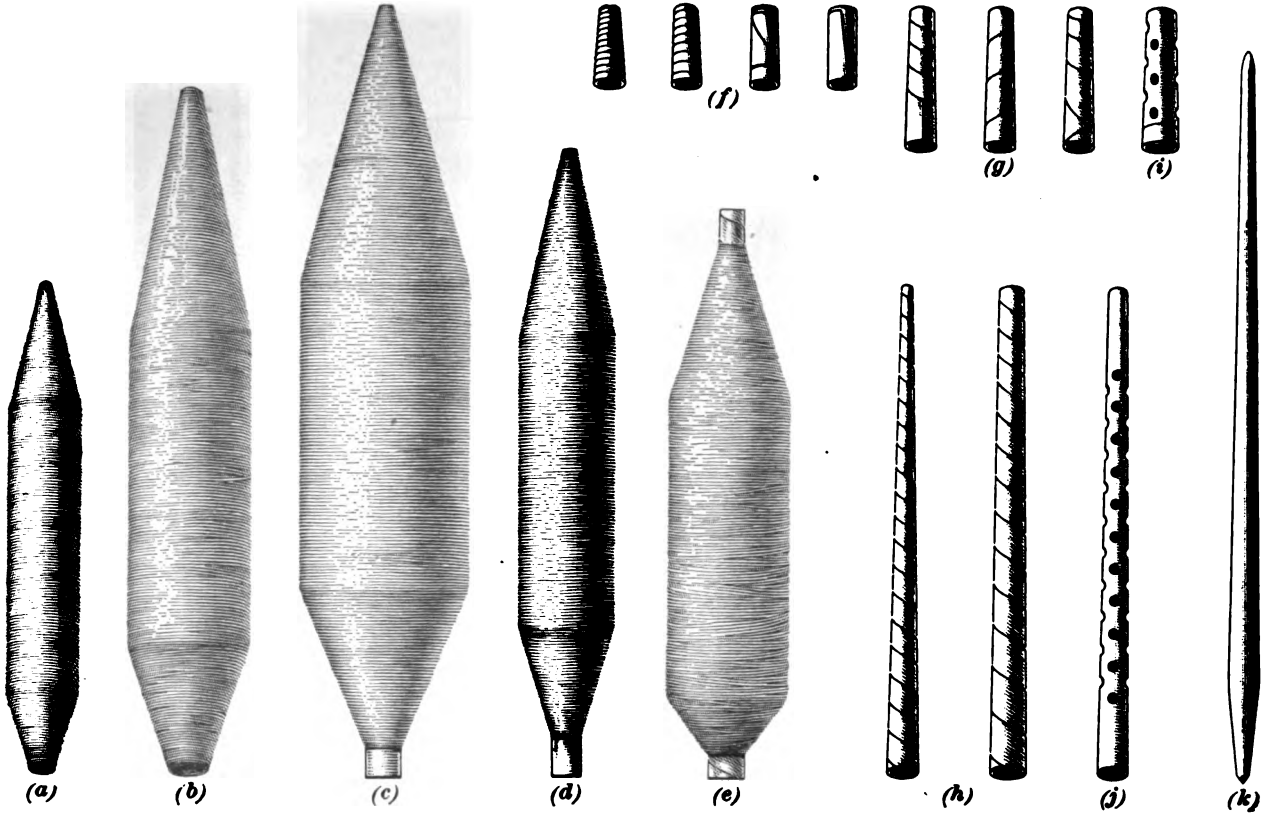

FIG. 2

Digitized by Google

customary sizes, although other sizes can be made, the maximum diameter depending on the space between the spindles in the mule, and the length depending on the length of that part of the spindle available for building the cop.

In using mule cops, the thread is taken from the nose and unwound until the bottom is reached; these cops are, of course, always single yarn and consist of but one continuous thread.

Another style of cop is a *twiner cop* of ply yarn, which in all other respects resembles a mule warp cop. The name cop is also given to forms of yarn built up for special purposes, among which are cops for carpet- or quilt-loom

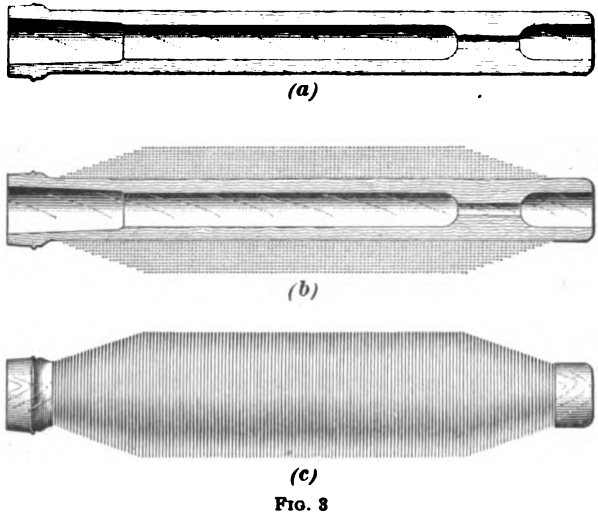

FIG. 8

shuttles. Yarn is sometimes wound into cops on a special machine, called a *cop-winding machine;* this, however, must not be confused with another machine, also called a cop-winding machine, that winds the yarn from cops.

The *carpet cop* is produced on this cop-winding machine, which winds yarn on a spindle in the form of a large cop, larger than the regular mule cop. A peculiarity of this cop is that when placed in the shuttle, the filling thread is taken out from the inside of the cop, starting at the bottom, while the cop is held in place in the shuttle by means of an elastic

Digitized by Google

band with an eye at the end, which is drawn over a hook in the shuttle. When carpet-filling yarns, rug-filling yarns, and quilt-filling yarns are spoken of as being sold in cop, a carpet cop is usually referred to.

19. Bobbins.—The word *bobbin* is applied to so many forms of wooden contrivances on which yarn is wound, or built up, that it is almost meaningless without a distinguishing word used with it. In the cotton trade, **bobbins** are

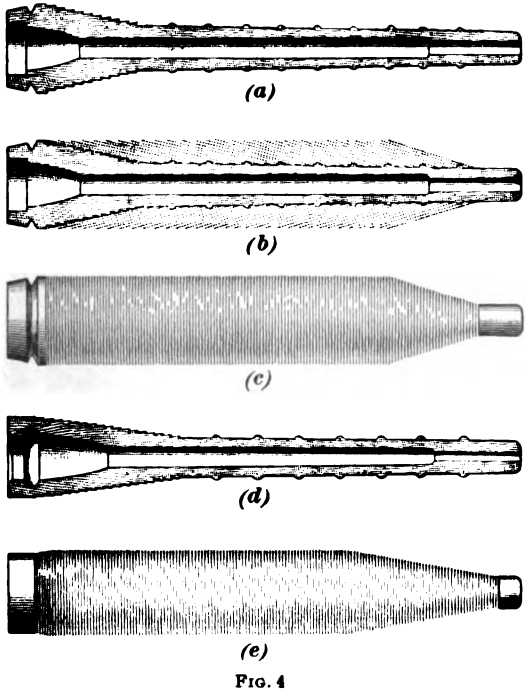

FIG. 4

classified as ring-frame bobbins, throstle bobbins, spinning bobbins, shuttle bobbins, filling bobbins, twister bobbins, etc.

1. *Ring-frame bobbins* are those used on the ring spinning frame, on which the single yarn is wound during spinning. They are usually constructed of wood, although sometimes of paper, and are of two distinct types, known as the *warp bobbin*, shown in Fig. 3, and the *filling bobbin*, shown in Fig. 4. In

Digitized by Google

each figure, (*a*) is a section through the empty bobbin, (*b*) a section through the full bobbin, and (*c*) a view of the full bobbin. The warp bobbin is arranged to contain coils of yarn wound on it in layers having a long traverse, the first layer extending almost the length of the bobbin, and the traverse being reduced as the yarn is wound on until it ultimately forms a cone at each end; this is called a *warp wind.* The yarn from this bobbin is generally drawn from the side.

In filling bobbins, the traverse is rather short and commences on a cone-shaped projection near the base of the bobbin, so as to wind at an angle. At each traverse, winding occurs a little higher up, with the same angle maintained throughout the winding of the yarn on the bobbin. When it

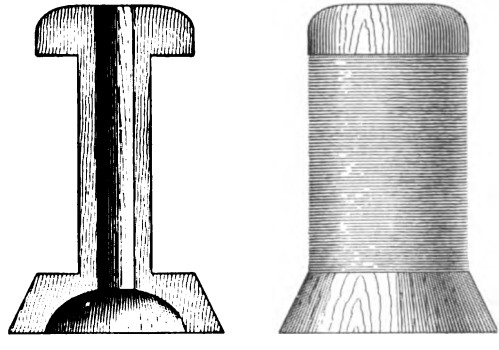

(*a*) (*b*)

FIG. 5

is completed a cone formation is found only at one end—near the top; this is called a *filling wind.* Another style of ring-filling bobbin used for cotton yarn is shown in Fig. 4, in section in view (*d*), and filled with yarn in (*e*). The yarn from a filling bobbin is drawn over the nose.

2. *Throstle bobbins* are small spools, as shown in Fig. 5, in which (*a*) represents the section of an empty bobbin, and (*b*) a full bobbin. They are used on the throstle spinning frame, the traverse of which is such that it winds the yarn in even layers corresponding to the distance between the heads, and parallel to the barrel of the bobbin.

Digitized by Google

3. *Twister Bobbins.*—The bobbins on which ply yarn is wound at the twister are of different shapes, depending on the method of twisting that is employed or, in the case of

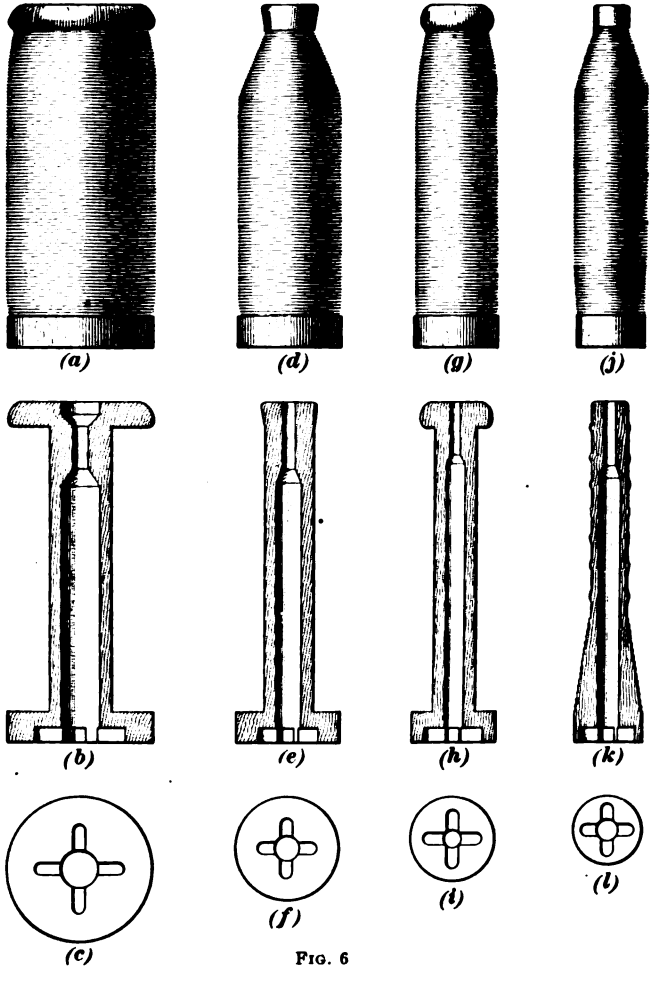

FIG. 6

ring twisting, on whether the frame is intended to build with the warp wind or the filling wind, according to whether it is desired to unwind the yarn from the side or from the top of the bobbin.

Digitized by Google

The flyer-twister bobbin somewhat resembles the throstle bobbin shown in Fig. 5. Ring-twister bobbins are made in various styles, four of which are shown in Fig. 6; (*b*) and (*h*) are double-headed bobbins, and (*e*) and (*k*) single-headed bobbins, all shown empty and in section; (*b*) is chiefly used for coarse numbers in dry twisting, with a long traverse; (*e*) and (*k*) are commonly used in dry twisting, with a short traverse, so that the yarn can be unwound from the nose of the bobbin; the construction shown in (*k*) is a filling bobbin intended for use in the shuttle of the loom; (*h*) is a style generally used for wet twisting, although (*e*) is also used for this purpose. The full bobbins are shown at (*a*), (*d*), (*g*), (*j*) and the bases of the bobbins at (*c*), (*f*), (*i*), (*l*).

The bobbin (*a*) is sometimes made as large as 4 inches in diameter; the others are from 1½ to 2 inches in diameter at the base. That part of the bobbin that is covered with yarn is usually 6 inches in length, while the bobbin itself is somewhat longer. These dimensions, of course, are varied for different frames and for different kinds of work.

4. *Shuttle Bobbins, or Quills.*—The term shuttle bobbin is frequently used to designate a bobbin of suitable construction to fit inside the loom shuttle, so that the yarn may be unwound from it through the eye of the shuttle and be woven into the cloth as filling. The most common style of shuttle bobbin for cotton yarns is the ring-frame filling bobbin, shown in Fig. 4. This bobbin is so constructed that it will fit either the spindle of the ring spinning filling frame or the shuttle, so that the yarn may be spun directly on to the bobbin from which it is woven in the shuttle. Another form of shuttle bobbin is shown in Fig. 7 (*a*) and (*b*); (*a*) is a section through an empty bobbin and (*b*), a view of a full bobbin; this represents the type commonly used for colored cotton yarns for ginghams and other fabrics. The more common name for this bobbin in the United States is *quill*, or *quiller bobbin;* the name *quill* is used in some parts of Europe, but in Great Britain it is more commonly called a *pirn*. Strictly speaking, the quiller bobbin is used only in connection with long-chain quilling, while the pirn is the bobbin used to

Digitized by Google

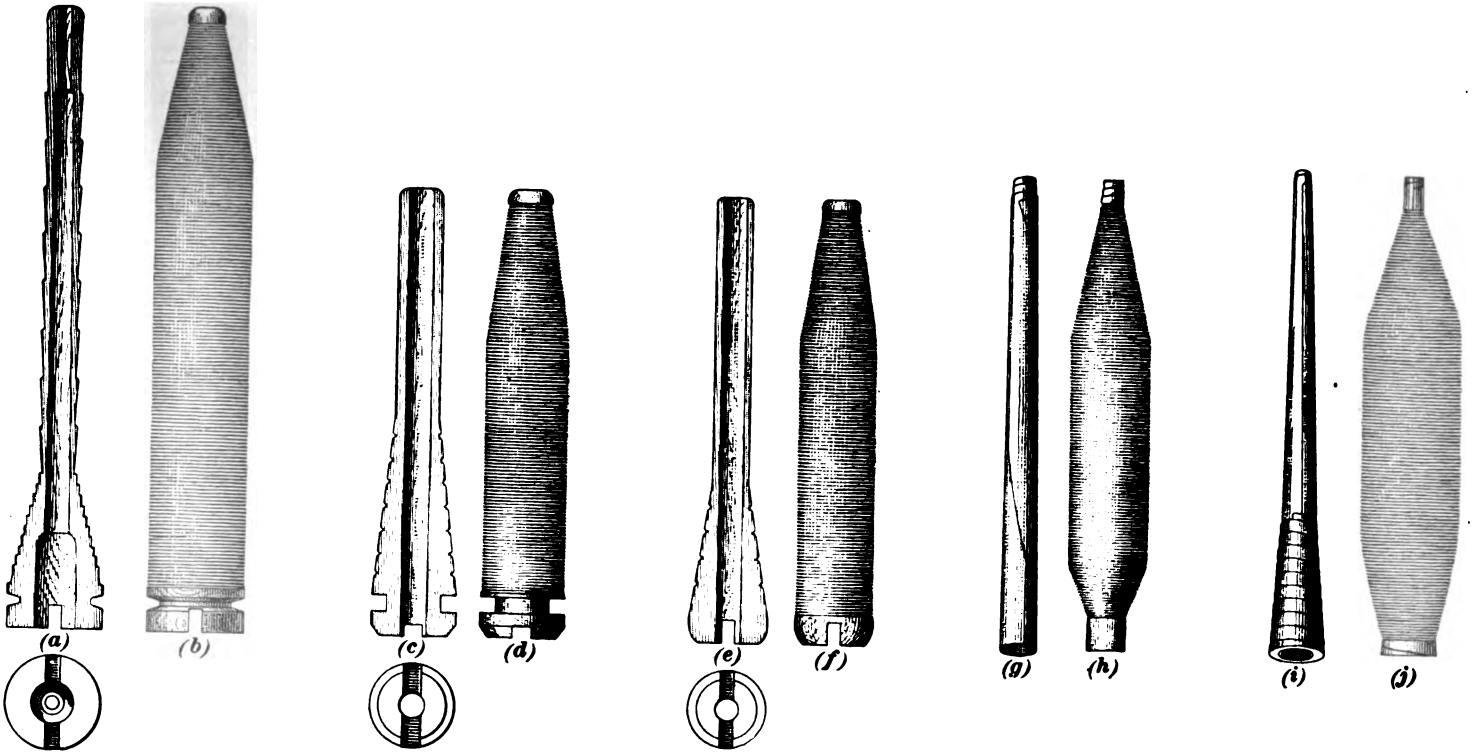

FIG. 7

Digitized by Google

contain filling yarn that has been unwound from a skein; but much confusion exists in different districts and the names filling bobbins, quills, and pirns are applied indiscriminately. Fig. 7 (*c*) and (*e*) shows sections of empty wooden pirns, while views (*d*) and (*f*) show the pirns when full; (*g*) and (*i*) represent paper tubes used for the same purpose, while (*h*) and (*j*) represent these tubes filled with yarn. After yarns intended for filling have been dyed, bleached, or otherwise dealt with, they are always wound on some style of quill or pirn, ready for use in the shuttle. Quills for cotton are

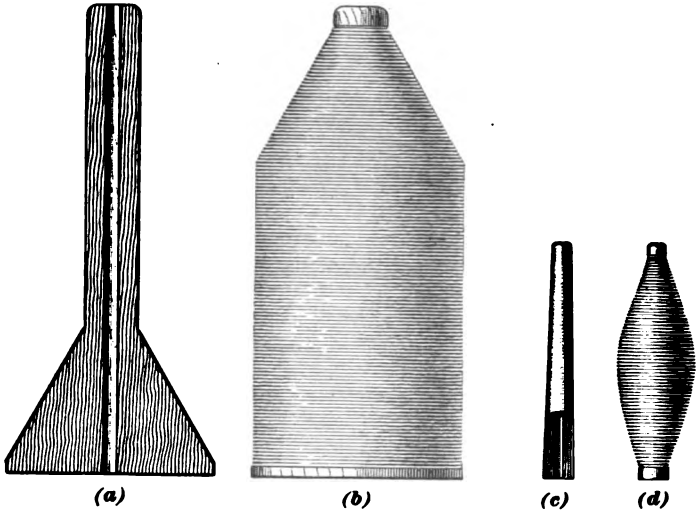

FIG. 8

generally $6\frac{1}{2}$ inches long; pirns and paper tubes are from 4 to 7 inches long. Many other shapes and sizes are used in addition to those shown.

5. *Knitting-Yarn Bobbins.*—On various knitting machines, it is necessary to have a large quantity of yarn that can be unwound from the top of the bobbin, and for this purpose wooden bobbins of various shapes are used. One style is shown empty in Fig. 8 (*a*) and filled in view (*b*); this is the kind generally used in the United States, and is 18 or 20 inches long. The tapered part is covered with cloth, as

Digitized by Google

shown by the heavy outline. Another style, which is used in Europe, sometimes called a hosiery spool, is shown partly in section and empty in view (*c*) and filled in view (*d*).

6. *Taper Bobbins.*—Another style of bobbin, known as the taper bobbin, sometimes called a *taper spool*, since it is made on a spooler, is shown empty in Fig. 9 (*a*) and full in view (*b*). It is used when desired to wind a large quantity of yarn on a bobbin in such a way that it can be wound off at the end, and is filled on the same machine as the double-headed spool by changing the winding arrangement. Such bobbins vary from 3 to 4 inches in diameter and from 6 to 9 inches in length; they are generally used for yarn that has to be gassed—that is, yarn that has to have projecting fibers singed off—or reeled, which is the process of forming skeins.

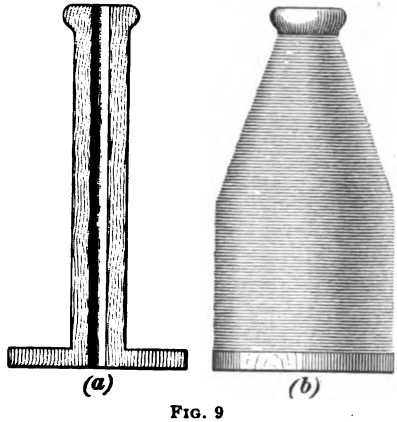

FIG. 9

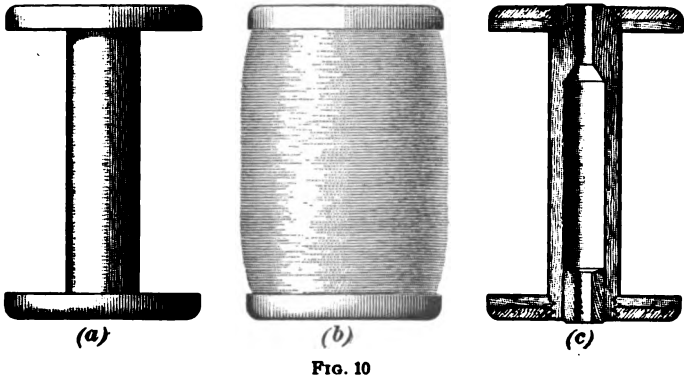

FIG. 10

20. Spools.—The word *spool*, when used alone, is almost as ambiguous as the word bobbin, since so many kinds of spools are used in almost all branches of the yarn industry.

Digitized by Google

In general, the word means a bobbin having a head, or flange, at each end. In the cotton trade, spools vary in size from what is known as a warper spool down to the diminutive spool on which sewing thread is sold in a dry-goods store.

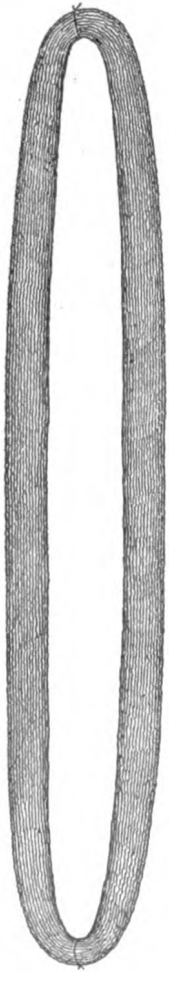

Cotton-warp spools, shown in Fig. 10, are double-headed bobbins that are known in Great Britain as bobbins. They are used in the process known as spooling in America and as winding in Great Britain, in which the yarn is wound from the mule cop or the ring-spinning-frame bobbin to the spool in barrel-shaped form, as shown in Fig. 10 (*b*), ready for warping. These spools vary in size from $2\frac{3}{4}$ to $5\frac{3}{4}$ inches in diameter, measured at the head of the spool, and from $3\frac{1}{2}$ to 6 inches between the heads; (*a*) is a view of an empty spool and (*c*), a section through same. This same style of spool is also used on some kinds of drum-winding machines for winding dyed or bleached warp yarns from the skein to the spool.

(*a*) (*b*) FIG. 11

21. Skeins.—Cotton yarn is often put up in the form of a skein, which is a continuous thread that has been wound around a revolving framework having a known circumference—such as 54 inches, 60 inches, 72 inches, or 1 meter—so that a certain number of revolutions will give a known length of yarn. The skein when removed from this frame is a continuous coil of yarn, as shown in Fig. 11 (*a*). In the cotton trade, for certain purposes this

Digitized by Google

skein contains a hank of 840 yards. For other purposes, the skein is made of a definite weight, such as 8 ounces, 2 ounces, 1 ounce, ½ ounce, etc.; more frequently, in America, it is made up without regard to any special length or weight. In some methods of skeining, the complete coil consists of seven distinct sections separated by small pieces of thread so that the skeins can be separated without entangling the yarn. The name *hank* is generally given in England to the entire skein when it contains 840 yards in cotton or 560 in worsted, shorter lengths being called skeins. After the skeins have been made, they are twisted by hand and doubled on themselves for convenience in handling and transportation, as in Fig. 11 (*b*). Strictly speaking, a skein of 840 yards is the only kind that should be spoken of as a hank; a number of these hanks twisted together are called a *knot*.

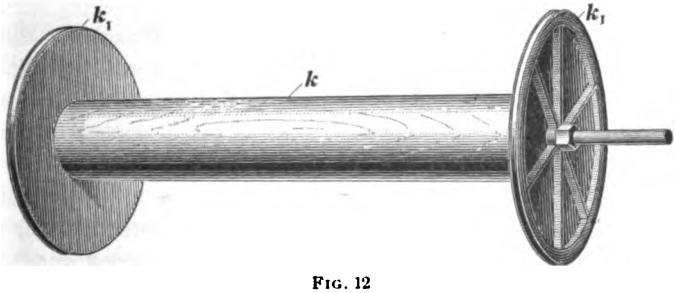

FIG. 12

22. Beam Warps.—A warp may be defined as a number of ends of yarn of equal length, parallel to one another, that go to form the lengthwise series of threads in cloth. Owing to the variations in the processes through which warps pass before being ready for the loom, they are put up in either of two forms—*beam warps* and *chains*. **Beam warps** are subdivided into *section beams*, or *warper beams*, and *loom beams*, sometimes called *slasher beams*, or *weavers' beams*.

When a warp for the loom is formed in a simple manner without having to pass through any bleaching, dyeing, weighting, or other process, it is prepared by winding the ends on a beam so as to form an even sheet between the heads. Beams are of various constructions, generally consisting of

Digitized by Google

a wooden barrel with iron heads, as shown in Fig. 12, which represents a section beam. The yarn is warped from spools to this section beam on a machine known as a *warper*. Afterwards the yarn from several of these section beams is combined and wound on to a loom beam, Fig. 13, at a machine known as a *slasher*. This form of preparing warps is commonly used in mills where the yarn is woven by the same firm that spins it.

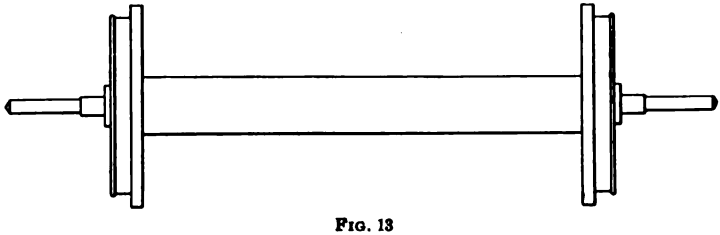

FIG. 13

23. Chains.—When yarn has to be bleached, dyed, printed, mercerized, or otherwise treated and afterwards used for the warp of a fabric, and sometimes when it has to be used as filling, it is put up in the form of a **chain.** For this purpose a large number of ends of yarn, usually several hundred, are gathered together so as to form a loose strand. The ends forming one warp are all of the same length, but the length of warps may vary from a few hundred yards up to several thousand. At each end, and sometimes at intervals throughout its length, a certain method of tying up the ends is adopted, so that they can be suitably separated without entanglement when the yarn is used. These chains can be packed without much risk of damage during transit, and as the mills where the yarn is to be used are generally located a considerable distance from where the yarn is spun, this is an important consideration and gives an advantage over the transportation of yarn on bobbins, spools, or beams. The chain form of warp is also a very convenient one in which to pass the yarn through the bleaching, dyeing, or similar processes before putting it on the loom beam or the filling quiller.

1. *Balled Chains.*—For convenience in transportation chains are coiled in two different ways, resulting in their

Digitized by Google

delivery in either the *balled* form or the *linked* form, often spoken of as *balled warps* and *linked warps*, although the yarn may be either warp or filling yarn. The loose strand of ends that forms the chain is warped in the same way for either balled or linked chains, the process differing at the final stage, in which the yarn is coiled. Balled chains are of three kinds—hand-made round balls, machine-made round balls, and machine-made cylindrical balls. The hand-made round-ball form, shown in Fig. 14 (*a*), is the oldest style and is now passing into disuse. It resembles a huge ball of twine and is formed on the arm of an operative, who first winds around his hand a small ball, which he gradually increases in size, by coiling other layers around it, until a large ball is formed. If the length is too great for one ball, the warp is sometimes made into two, which are connected by a short length of warp near the middle of its length. A more perfect ball can be made by a round-balling machine, the strands lying more evenly, as shown in Fig. 14 (*b*), and the ball in this case can be made larger than it is possible to do by hand. From the old style of round-ball warp has been derived the cylindrical form of warp, which still has the name of ball warp given to it, although this to some extent is misleading. A cylindrical-ball warp is formed on a balling machine by means of layers built up one on top of another until a large cylindrical form is reached, as shown in Fig. 14 (*c*). The round ball is used principally for short warps made on what is known as the short-chain system on the older form of circular warping mills or reels. The newer form of cylindrical-ball warps is generally used for warps made on the long-chain system and warped on a Denn warper or a common warper with a balling attachment.

2. *Linked Chains.*—The loose strand of ends to form a linked chain is prepared in the same way as for a ball warp, but instead of being coiled in a ball, the strand is linked, or looped, so as to form a continuous chain, so constructed that it can be pulled in one direction through the dyeing, bleaching, or other process to which it has to be subjected, but when it has been so treated, can be pulled from the other end so

Digitized by Google

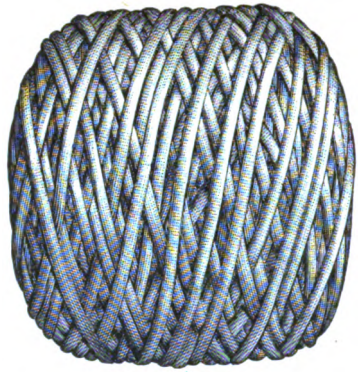

(a)

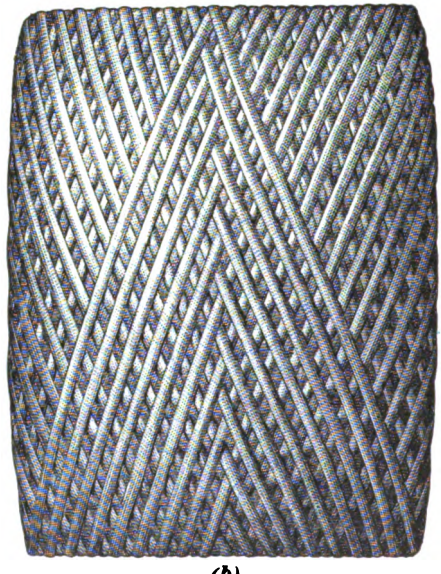

(b)

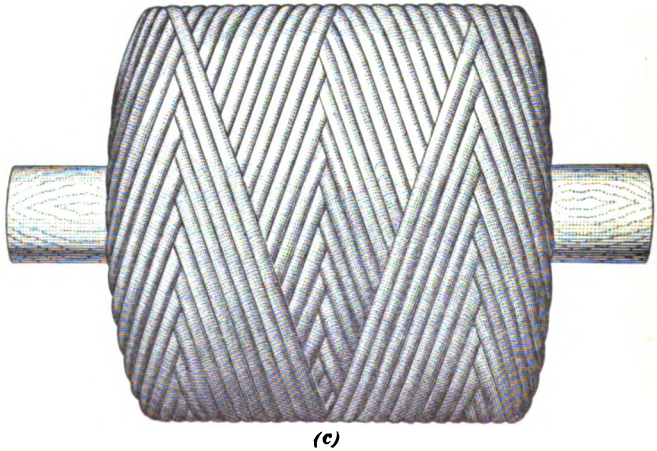

(c)

FIG. 14

Digitized by Google

as to destroy the linked arrangement and allow the warp to assume its original form of a loose strand of ends. By linking a warp in this manner, a 300-yard warp will measure

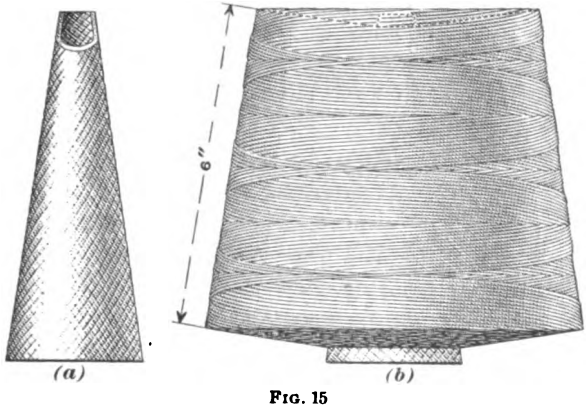

FIG. 15

less than 100 yards when linked, thus shortening the length of time necessary to pass it through any process of bleaching, dyeing, or drying. Chain warps, or linked warps, as they are sometimes called, are usually packed in bags for shipment.

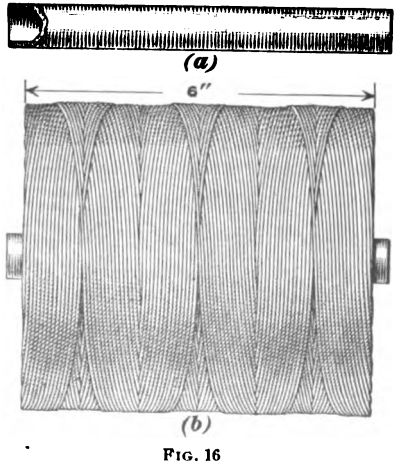

FIG. 16

24. Conical and Parallel Tubes.—The practice of putting up yarns in what are called **cones,** or **tubes,** is very common, and the method is gradually being adopted for many different purposes, but principally for knitting yarns. A full conical tube is shown in Fig. 15 (*b*), while (*a*) is the paper framework on which it is formed. The cone is made on what is known as a quick-traverse cross-winder, the cone tube fitting on the conical arbor, which revolves on a

Digitized by Google

revolving drum in some types of machines. By a suitable construction, the end of yarn being wound on the paper cone is given a horizontal traverse along the surface of the cone, and this being repeated many times builds up the yarn in the cone-shaped formation shown in the illustration. When a straight tube, as in Fig. 16 (*a*), is used as a foundation, the yarn is built up in cylindrical form, as shown in (*b*), commonly called a *cheese*, *parallel tube*, or merely a *tube*.

Two or more threads are wound together on cones when necessary; these, of course, are simply converted into one strand without being twisted. This is commonly done for such purposes as winding yarns for covering electric wires.

One type of machine by which the yarn is wound on the conical or parallel paper tube without coming in contact with the revolving drum is known as the Universal winder, and the name sometimes given to conical or parallel tubes made on such machines is that of Universal cones or tubes.

CLASSIFICATION OF COTTON YARNS ACCORDING TO PURPOSES FOR WHICH THEY ARE INTENDED

25. Weaving Yarns.—Cotton yarns are produced for a great variety of purposes, but principally for weaving into fabrics. Two distinct classes of yarns are made for weaving; namely, the warp and the filling, the warp being used lengthwise in the fabric and the filling crosswise, or from side to side. The English name for cotton warp is *twist*, and for cotton filling *weft*. The German name for warp is *kette*, and for filling *schuss;* while the French name for warp is *chaîne*, and for filling *remplisage*.

Warp yarn, as compared with filling yarn of the same number, is usually spun from longer-staple cotton, is harder-twisted, and possesses greater strength, as it must withstand the bulk of the strain in the loom and the chafing and wear of certain parts of the weaving mechanism. Filling yarn does not require so good a quality of cotton as does warp yarn of the same numbers. In American cotton weaving, yarns for both warp and filling are spun mostly

Digitized by Google

on the ring frame, although fine numbers are frequently spun on the mule, especially when for filling. In England, both warp and filling are usually spun on the mule, although the ring frame is being more widely used now, principally for warp.

No limit as to the numbers of yarn suitable for weaving can be given, as almost all numbers are used for this purpose, the warp usually being of lower counts than the filling. In the cotton trade, it is customary to use single yarn for both warp and filling, although ply yarns are sometimes used, principally for warp but occasionally for filling. In the former case they are mainly 2-ply when used for the side selvages, and usually 2-, 3-, 4-, or 5-ply when forming extra threads, such as leno threads, lappet threads, center selvages, and others used to produce special effects in the fabric. Two-ply cotton warps are largely used in mixed fabrics, the coarser ones being used for fabrics woven with woolen and worsted filling, and the finer ones for those used with silk filling.

26. Knitting Yarns.—Cotton knitting yarns are made in large quantities, are almost always mule-spun with less twist than weaving yarns, and in order to free them as far as possible from all impurities, ought to be well carded, and in some cases combed. They are usually made from longer-staple cotton than would be used for the same numbers of weaving yarns. The thread of the knitting yarn should be distinguished by its fineness, cleanness, and its slack twist, and should be full, round, and even.

Cotton yarns are used by knitters for a large variety of purposes, varying from the low numbers required for coarse miners' socks to the fine yarns for light Balbriggan underwear, and consequently are made in a wide range of numbers, principally, in both carded and combed yarns, from 6s to 30s, although finer numbers than these are made in many cases. Knitting yarns are almost always supplied in single yarns, although a quantity of 2-ply and even 3-ply is used for certain kinds of goods, especially in

Digitized by Google

fabrics that must have what is known as a lisle finish, and for the reenforcing threads that are inserted at the heels of stockings and other parts of knitted garments where extra wear takes place. Knitting yarns are usually supplied in an undyed state, although such mixes as jaegers, silvers, steels, as well as light shades in solid colors spun from cotton dyed in the raw state, form a large percentage of the knitting-yarn trade for underwear in numbers from 22s to 60s.

Many varieties of cotton are used for knitting yarns, including Peeler and Egyptian for the better qualities, American uplands for the medium qualities, and short American mixed with waste or with East Indian cotton for the low qualities; the latter, however, is not spun in the United States.

27. Yarns for Converting.—Cotton yarns are spun in a large variety of numbers for bleaching, dyeing, mercerizing, printing, dressing, and polishing; they are usually ring-spun, and when intended for processes that involve considerable tension or strain, such as mercerizing and polishing, are made from long-staple cottons of extra good quality.

28. Yarns for Export.—Relatively very little yarn is exported from the United States, but the export trade is a very important branch of the yarn business in the European manufacturing countries. This yarn is usually spun from as low a variety of cotton as can be used for the numbers of yarn required, and is in most cases reeled and made into bundles of 10 pounds each. A small quantity, however, is exported in the form of mule cops, packed in casks of about 560 pounds each.

29. Carpet yarns are used for the warp of carpets, particularly for the cheaper classes of floor coverings. They are among the cheapest cotton yarns made, and a low quality of cotton, usually short-stapled American, is used in their manufacture. They are spun on the ring frame and are afterwards twisted into ply yarns, either 3-ply, 4-ply, or 5-ply as a rule. Number 8s is the most common number that is made, thus giving the three standards of 8/3, 8/4, and 8/5, although in some cases they are made coarser or

Digitized by Google

finer as required. As it is customary to dye the warp yarns for carpets, carpet yarns are generally reeled into 72-inch skeins, cross-reel. In the carpet mills, as several of the ply threads are used together, it is found more economical for those mills that make a cheap grade of carpet and do not dye the warps to buy their carpet yarns on tubes containing three ends of either the 3-ply, the 4-ply, or the 5-ply wound together without being twisted.

30. Upholstery Yarns.—In the upholstery trade, a large quantity of slack-reel skein yarn is used. The two standard numbers are 9s and 16s; each of these is put up either in 3-ply or 4-ply, thus giving four standard numbers—9/3, 9/4, 16/3, and 16/4. As these yarns have to be dyed, they are put up in skeins, 54-inch skeins being the standard. One peculiarity of these yarns is that, in making the ply thread, it is very slackly twisted, with a few turns to the foot, while ordinary ply yarns usually have many turns to the inch. Upholstery yarns are made from short-staple American cotton.

31. Cotton Yarns for Rugs.—A line of yarns somewhat similar to the upholstery yarns is made for fringes for rugs, often in 14s, 2-ply.

32. Thread is made from ply yarns in a large variety of numbers, qualities, colors, and forms, comprising sewing thread, seaming thread, covering thread, embroidery thread, mending thread, etc., but is not included within the scope of this Section.

33. Yarns for Cordage.—Cotton yarns are largely used for making twine, cord, and rope, but as such yarns are usually spun by firms that make the cordage, their manufacture is not of much general interest. Cotton yarns for twines are usually coarse numbers of ring-spun yarns that are twisted into either 2-, 3-, 4-, or more, ply, and wound into balls or put on cones or tubes. They are usually sold without being dyed or otherwise treated, the general run being a 2-ply, dry-twisted twine.

Digitized by Google

Various better classes of twines are made under the name of druggists' twines, macramé twines, cable twines, ply twines, hawser twines, or under other names, which are sometimes private trade names of a particular manufacturer. These are made from finer yarns with a larger number of plies, so as to make a level, smooth, and strong twine. They are often wet-twisted, to further insure the fibers lying close and thus producing a smooth, hard surface. In some cases, for the better classes of twine, they are cabled, and frequently are dyed or polished. As they are used for almost every conceivable purpose, it is almost impossible to state the numbers of yarn that are used, but as a rule the single yarns from which they are made are not finer than 30s.

FIG. 17

Cotton cords are usually referred to as *sash cord*, although there are other varieties of cords and rope. They are made from $\frac{3}{16}$ to $\frac{1}{2}$ inch in diameter and are built up of coarse cotton yarns made from low-grade, short-staple cotton or combinations of cotton and waste, usually about number 8s, which are afterwards made into 2-, or more, ply. The central core of the better-class cords or rope, such as sash cord, consists of a number of these ply threads, around which others are braided.

Other ropes are made by twisting heavy strands of cotton together. Cords and ropes of this character are spoken of as *all-thread* ropes, to distinguish them from cheaper grades, such as clothes lines, which are made by twisting yarn around a central core of roving.

34. Cotton Banding and Driving Ropes. In making cotton banding, such as mule banding and power-transmission ropes, sometimes as large as 2 inches in diameter, a large number of threads is formed into a strand and a number of these strands taken to form the rope. The threads are usually not over

Digitized by Google

30s in fineness, but, especially for the best grades of ropes, good American, or even Egyptian, cotton is used.

35. Parallel ply tapes, as shown in Fig. 17, are a form of yarn that has the appearance, to some extent, of a woven tape, although it has not been woven, but has been made up by arranging several threads of yarn side by side and attaching them with an adhesive paste. It is now used for some purposes for which woven ribbon and woven tape were formerly used. As it is composed of a number of ends, usually of ply yarn, laid side by side, it might be classed as a variety of folded yarn, although it is an imitation tape. It is used for tying parcels, cigars, and for similar purposes where it is only to be used once, as it easily frays and the threads separate if handled. By arranging different colors of thread side by side, ornamental effects can be produced and the names, trade marks, and descriptions of goods printed on it.

YARNS FROM STEM FIBERS

LINEN YARNS

36. Among the fibers spun into yarn are those obtained from the stems of plants, such as flax, hemp, jute, and china grass, ramie, or rhea.

Linen yarns are those procured from fibers obtained from an inner layer of bast in the stem of the flax plant, which belongs to the order *Linaceæ* and is botanically termed *Linum;* strictly speaking, the name *flax yarns* would be more accurate, but the term linen has always been so commonly used that it is generally accepted. The plant is an annual, that is, the seed is sown for it each year, and is cultivated in Holland, Russia, the United States, Ireland, Germany, Austria, and Belgium. The best flax is produced in Ireland and Belgium. Linen yarns are not classified according to the geographical source of supply of the flax, as is common with cotton yarns, but rather according to the methods of spinning and the whiteness of the yarn. When

Digitized by Google

linen yarns are classified according to the origin of the material, the Irish linen and Belgian linen are placed first.

37. Linen Yarns Classified According to the Methods of Preparation.—The flax is obtained from the stem of the plant by means of a retting process, which partly decays the constituent parts of the stem, so that the valuable fiber may be removed, after which, by means of breaking, scutching, and hackling processes, the fiber is obtained and separated into long bunches, varying from 12 to 30 inches in length, known as *line flax*, and also a shorter, tangled mass, containing woody particles and impurities, known as *tow*. Linen yarns may be made either from the line flax or the tow, which gives the two distinct varieties—**line** and **tow.** These may be distinguished by the fact that line yarns are very much finer in number than tow yarns, and have a smoother and more even construction. Common numbers of line yarns are from 10s to 30s, although they are spun both finer and coarser than this. Line yarn is the variety most used for weaving purposes, lace making, thread making, etc. The better qualities of flax have a light yellow, gray, or greenish appearance, while poorer qualities are darker gray or brownish in shade. Tow yarns are made from 10s to 15s dry-spun and from 18s to 30s wet-spun, and coarser. They are used for weaving, twine making, etc.

The division of both line and tow yarns into *wet-spun* and *dry-spun* yarns depends on whether the fibers immediately before spinning are moistened in the spinning machine or not. The wet-spun yarns are spun after the application of cold, warm, or hot water; the fine yarns having a smooth, even thread are made by this process. Ply and sometimes even cable yarns are made both from line and tow yarns. When linen yarn is manufactured into twine, especially of the better qualities, line yarns in either ply or cable form are generally used.

38. Linen Yarns Classified According to the Forms in Which Put Up.—Linen yarns are not put up

Digitized by Google

in so many forms as cotton yarns because the fiber is unsuitable to be spun in so many different ways or to be passed through many after processes.

1. *Bobbins.*—The chief forms in which linen yarn is put up are bobbins, which somewhat resemble the cotton bobbin shown in Fig. 6 (*a*), having a head at each end. Wet-spun linen yarns have to be removed from the bobbin immediately after spinning, in order to dry the yarn, so that these bobbins are only found in the mill in which the yarn is spun and do not form a subject of commercial dealing.

2. *Skeins.*—A common form in which linen yarn is put up is in that of a skein. Skeins are formed in the same way as cotton yarns, but are larger, being made 90 inches in circumference. In countries using the metric system, where yarns are reeled, they are made into slightly larger skeins, running about 91 inches in English measurement.

3. *Cops.*—Linen yarns are not put up in cop form, as the fiber does not lend itself to mule spinning.

4. *Beams.*—Linen yarns are, of course, wound on loom beams when they are intended for weaving purposes.

5. *Pirns.*—When linen yarn has to be used for filling, it is wound on pirns or shuttle bobbins somewhat resembling the larger one in Fig. 7.

6. *Cones and Tubes.*—Linen yarns are sometimes coned or tubed for sale, as the structure of the thread does not render this form of putting up linen yarns impossible.

7. *Spools.*—Linen yarns are found on either large or small spools when in the form of sewing thread; the smaller spools are commonly sold in dry-goods stores, while the larger ones are used in factories where linen thread is used in quantity for power sewing machines.

8. *Balls.*—Linen yarn is sometimes put up in small round balls weighing $\frac{1}{2}$ or 1 pound each.

Neither line nor tow yarns are spun to any large extent in the United States, but are made mostly in Ireland, Scotland, and Belgium. Large quantities of linen yarns are imported into the United States in the form of skeins packed in bales weighing 600 or 700 pounds.

Digitized by Google

39. Linen Yarns Classified According to Purposes for Which Intended.—Line yarns are used chiefly for weaving, either warp or filling, for which purpose the numbers vary along the whole range of linen numbers; for lace making, which requires the finer yarns; for thread making, which also requires the fine line yarns; and for twine that has to be of considerable strength, such as jacquard-harness twine. Yarns for cordage are almost always tow yarns, although sometimes line yarns are used for this purpose; but as a rule, only the smaller sizes of cords, which are classified as twines, come under the head of flax, and tow yarn is used for this purpose.

HEMP YARNS

40. Hemp yarns are procured from fibers obtained from the bast portion of the stem of the hemp plant—the *Cannabis sativa* of the nettle family (*Urticaceæ*). Hemp is obtained principally from Europe, the better qualities being found in Southern Europe, including Italy and Spain, and the inferior grades in Russia and Germany. Italian hemp is the best and has a long silky fiber, while the Russian crop is one of the most important as to quantity.

Hemp yarns are not usually classified according to the geographical production of the material, excepting that Italian hemp yarns are sometimes so indicated in order to draw attention to their high quality. What has been said with regard to the classification of linen yarns according to their method of production, the forms in which they are put up, their division into line and tow yarns, and the division of the line yarns into wet- and dry-spun applies almost equally well to hemp yarns.

Hemp yarn is found in bobbins, skeins, and beams. The weaving yarns are divided into warp and filling, and are used for weaving coarse bagging, canvas, and other fabrics requiring strength and bulk. It is also used for the warp of certain kinds of carpets. The hemp that is described here should not be confused with what is known as *Manila hemp*, which is really not a hemp fiber, being a leaf fiber, while the true hemp is a stem fiber.

Digitized by Google

JUTE

41. Jute yarns are made from the bast of the jute plant, sometimes called the Jews' mallow, the scientific name of which is *Corchorus capsularis*, and which is an annual belonging to the *Tiliaceæ* order.

As almost the entire supply of jute comes from the East Indies, being shipped principally from Calcutta, from which it derives the name sometimes given to it of Calcutta hemp, no special geographical division of jute yarns can be made. They are classified, as are linen and hemp yarns, according to whether they are line yarns or tow yarns, but are almost always dry-spun.

Like linen and hemp yarns, jute is found on bobbins, in skeins, and in warps. It is also found in cops, which, however, are not mule cops, but carpet cops made on a cop-winding machine.

RAMIE YARNS

42. Ramie yarns are produced from the fibers obtained from the bast of the stems of certain Asiatic members of the nettle family (*Urticaceæ*), which are now cultivated to some extent in other countries, including the United States. The botanical name for the species from which this fiber is derived is *Bœhmeria nivea*, sometimes called the Chinese nettle, or snow nettle, or, as given by some authorities, *Bœhmeria tenacissima*. The fiber is spoken of variously as *china grass*, *ramie*, or *rhea*. No definite geographical classification of ramie yarns, nor in fact a classification of the form in which they are put up, their appearance, or their method of production, can be satisfactorily given, as the ramie-yarn industry is not yet of much commercial importance, although considerable attention is being given to it, and there are a few ramie-yarn mills in England and Germany.

Digitized by Google

YARNS FROM LEAF FIBERS

43. Among the yarns made from fibers derived from the leaves of plants are those produced from **Manila hemp, sisal, New Zealand hemp,** and **pineapple fiber.**

As leaf fibers are usually coarser and less suitable for spinning into yarns and weaving into fabrics than either seed or stem fibers, they are more commonly used for rope making, as, for instance, for driving ropes, cordage for vessels, cables, etc., although in a few cases they are used for weaving into coarse mattings and carpets, and in the case of Manila hemp and sisal, for filling in upholstery fabrics. This is done to so small an extent that they are not of much commercial importance in the yarn industry.

FRUIT FIBERS

44. The only fruit fiber of much commercial importance is the **coconut fiber,** sometimes spoken of as *coir*, or *coconut bast*, which is obtained from the covering of the coconut, being used principally for mats, carpets, etc. The remarks that have been made regarding leaf fibers in general apply to the coir fiber.

Digitized by Google

YARNS

(PART 2)

YARNS FROM ANIMAL FIBERS

WOOLEN AND WORSTED YARNS

1. Wool, by which is understood the fleece of the sheep, is spun into two classes of yarns, namely, *woolen* and *worsted* yarns, the distinction between the two being in the disposition of the individual fibers in the thread. Strictly speaking, both are wool yarns, but it is the custom to divide them into these two main classifications for commercial purposes, because of the difference in their structure, appearance, method of manufacture, and uses.

A **woolen yarn** is a thread spun from sheep's wool in which the individual fibers are mixed and crossed in various directions so that the surface of the thread presents a rough, although uniform, appearance, but lacking in luster. A **worsted yarn** is also a thread composed of wool, but the individual fibers lie smoothly and in the direction of the thread and are parallel to one another. The surface of worsted yarn is comparatively smooth and generally has a well-defined luster.

No distinction is made between woolen and worsted yarns merely because of the length of the wool fiber used in their construction, although a somewhat longer fiber is generally used in the manufacture of worsted yarns, which are free from the very short fibers often found mixed with the longer

For notice of copyright, see page immediately following the title page

Digitized by Google

ones in woolen yarns. Strictly speaking, the distinction between woolen and worsted yarns should be made under the head of yarns as classified according to the method of manufacture, since worsted yarn is produced by an entirely different system from that used in the manufacture of woolen yarn.

RAW MATERIAL FOR WOOLEN AND WORSTED YARNS

2. Of all animal fibers that are used in the production of yarn for textile purposes, the fleece of the domesticated sheep is by far the most important—so much so that the general interpretation of the word *wool*, unless otherwise qualified, is that of the wool of the sheep, although in its true sense the word wool is applicable to the fleece of some other animals. The sheep belongs to the scientific classification of *Ovis*, which is divided into a large number of species. Wool is produced in many parts of the world, chiefly in the United States, Australia, South America, and Europe.

Wools are often divided in a general way in America into two classes—domestic and foreign, or imported, wools. Foreign wools are sometimes divided according to the continent on which they are raised, as, for instance, South American wools, Asiatic wools, Australian wools, etc. They are also sometimes divided according to the country from which they come, as Russian wools, China wools, etc., and sometimes according to the ports from which they are shipped, as Buenos Ayres, Port Phillip, etc. Wool exported from Buenos Ayres is frequently called River Plata wool, from the fact that Buenos Ayres is situated at the mouth of the River Plata (Rio de la Plata). Another classification is that of the Cape wools from South Africa.

Domestic wools are usually designated by the state in which they are grown, as Ohio, Pennsylvania, West Virginia, Texas wools, etc. The wool from the large group of territories, or former territories, is known as territory wool, and includes North and South Dakota, Montana, Wyoming, Colorado, New Mexico, Arizona, Utah, Nevada, Idaho, Washington, Oregon, and California wools.

Digitized by Google

Wools are often divided according to the use to which they are to be put, as, for instance, clothing wools for woolen yarns, combing wools for braid, luster, and carpet yarns; fine combing wools for the fine and medium worsted yarns, etc.; also according to the breed of the sheep, as Saxony, merino, cross-bred, etc. Sometimes two or more divisions are grouped, as, for instance, Australian merino, Ohio, Pennsylvania, or West Virginia cross-breds. The cross-breds are further subdivided according to the amount of merino blood in the cross-bred sheep, as, for instance, $\frac{3}{8}$-blood, $\frac{1}{4}$-blood, $\frac{1}{2}$-blood, etc.; also as XXX, which means a first cross of a merino with a Saxony, XX, which is the full-blooded merino, and X, which is the quality of a $\frac{3}{4}$-blood merino and $\frac{1}{4}$-blood common sheep. The term *delaine* is sometimes used in connection with wools, and while it is a term of somewhat loose application, its general significance is a wool of superior quality, from a sheep containing merino blood. Raw wools are also classified according to the condition or age of the sheep, whether washed or not, and in many other ways, but as this Section is intended to deal only with yarns and the extent to which the classes of wool affect the naming of yarns made from them, these will be ignored; in fact, many of the classifications of raw wools disappear when classifying the yarns.

3. Worsted Yarns Classified According to Raw Material.—The nomenclature depending on the country of origin or the shipping point of the raw wool is not extended to the yarns made from such wool, except in the case of Australian, which is a distinction given to certain kinds of worsted yarn, and American and Canadian when applied to braid yarns that are spun from long and coarse, or *braid*, wools, either of American or Canadian origin. Yarns, however, are classified to some extent according to the breed of the sheep from which the raw wool has been taken, and from these sources are derived such yarn classifications as yarns from $\frac{1}{4}$-blood, from $\frac{3}{8}$-blood, from $\frac{1}{2}$-blood, and merinos, in the worsted-yarn trade. There is a worsted merino yarn,

Digitized by Google

however, that is made by blending a combed wool and a combed cotton in suitable proportions.

It is only worsted yarns that are classified according to the names of the wool from which they are made. Woolen yarns are spun to a large extent from wools that it is not necessary to classify according to their breed or origin, and commercial woolen yarns in many cases contain only a percentage of wool, so that such classifications are not applied to these yarns to any appreciable extent, except in certain cases; for instance, the term *merino yarn* is applied to certain so-called woolen yarns, which, however, should not be construed to mean that these yarns are made exclusively from the wool of the merino sheep.

All common and $\frac{1}{4}$-blood worsted yarns are spun into numbers below 20s; the $\frac{3}{8}$-blood and $\frac{1}{2}$-blood yarns range from 20s to 40s; the delaine worsted yarns, from 40s to 50s; while the Australian worsted yarns are the finest, ranging from 40s to 70s. The Canadian braid yarns are made from 20s to 40s.

The difference between yarns made from different wools is chiefly in the fineness of the thread. Yarns from the wool of sheep with a large proportion of merino blood are the finest numbers, with the exception of yarns from Saxony wools.

4. Woolen Yarns Classified According to Raw Material.—Woolen yarns spun on the straight woolen system may be roughly divided into three classes: (1) pure woolen yarns, (2) shoddy yarns, and (3) part-wool yarns.

1. *Pure woolen yarns* are composed of the wool of the sheep only, and in general are yarns of fine quality, and used in the highest-grade fabrics. They are not made to nearly so great an extent at present as formerly, and it may be stated that the bulk of the so-called woolen yarns now made are either shoddy or part-wool yarns.

2. *Shoddy yarns* are all wool but are made from a mixture, in the raw stock, of new wool and shoddy, new wool and mungo, new wool and extract, or new wool and some of the various hairs that are occasionally used for textile purposes. Shoddy, mungo, and extract are sometimes manufactured

Digitized by Google

into very coarse yarns, but are more frequently used with new wool as mixture yarns.

Shoddy is the wool fiber obtained from soft woolen rags, such as flannels, stockings, and knit goods, which have not been milled or felted. While shoddy is pure wool, it loses much of its characteristic wool nature in the manufacture and tearing apart again to regain the fiber. In the process of obtaining shoddy, the woolen rags are ground up or torn into a fibrous state, which necessarily breaks the fiber until it is only a fraction of its original length. The loss in length of the fiber and the destruction of the uniform and regular structure characteristic of new wool makes shoddy fit only for mixing with new wool in the production of the lower qualities of goods.

Mungo is the recovered fiber of hard-spun and felted woolen and worsted goods. Owing to the hard milling that these goods undergo, mungo is inferior to shoddy. There are two varieties of mungos, the better quality being obtained from the new rags that accumulate in tailor shops as clippings, and the poorer quality from worn broadcloths, suitings, etc.

Extract is the recovered wool fiber obtained from worn or waste cloth that contained cotton or other vegetable fibers as well as wool. The vegetable fibers are first removed by a chemical process known as carbonization, and the wool fibers afterwards worked up into a fibrous state in a similar manner to shoddy and mungo.

3. *Part-wool yarns* are made from a blend of wool and cotton, wool and silk noils, or wool and some other fiber, and while forming a very large class of yarns often called wool and sold as such, are really only part wool, such as are called in German half-wool (*halb wolle*) yarns. Merino yarns form one variety of such yarns; they are spun on the woolen principle from a blend of wool and cotton, and resemble woolen yarn. Different percentages of wool and cotton are used for merino yarns; for instance, 40 per cent. wool and 60 per cent. cotton, usually written 40–60; 50 per cent. wool and 50 per cent. cotton, written 50–50; 60 per cent. wool and

Digitized by Google

40 per cent. cotton, written 60–40; and 70 per cent. wool and 30 per cent. cotton, written 70–30.

Vigogne yarns is a name given to a class of yarn formerly made like merinos but with a very small proportion of wool, generally only from 3 to 10 per cent. The name was probably originally adopted in order to give the impression that the yarn was made from the wool of the vicugna goat, which makes a very desirable yarn, but vigogne yarns do not contain any vicugna wool; the small percentage of wool used is that of the sheep, cotton being the other constituent of the yarn.

5. A more convenient classification of woolen yarns than under the three foregoing headings would be to consider all woolen yarns other than those from pure, new wool—such as wool-and-shoddy and wool-and-cotton yarns—as **mixture yarns**; this is sometimes done, but it leads to complications, since the term mixture yarns, when used in connection with woolen yarn, also includes those of pure wool produced by mixing colored wools, and thus may refer to a yarn of any one of the three classes previously mentioned. For instance, yarns may be made from mixtures of different colors of wool, and also from mixtures of wool and cotton, wool and shoddy, wool and mungo, wool and extract, or wool and silk, either of one color or of different colors, all of which are sometimes spoken of under the general head of mixture yarns. Woolen mixes of this kind are very common, the mixing being made early in the process of manufacture, before the stock is carded. Gray-mixture yarns, for example, are obtained by mixing black and white wool together in such a proportion as to give a gray of the desired shade.

WOOLEN YARNS CLASSIFIED ACCORDING TO THE METHODS OF MANUFACTURE

6. Single yarns made from sheep's wool when divided according to the different methods of their production consist of: (1) woolen yarns made by the ordinary woolen process, (2) woolen yarns made on the Belgian system, and (3) woolen yarns made on the Saxon system.

Digitized by Google

7. Ordinary Woolen Process.—Most woolen yarns are of the first class, and are produced by spinning the yarn directly from the spool made at the card. The web of wool at the card is divided, by ring doffers, into ribbons, which are condensed into rovings by rub aprons or rub rolls. These rovings are then wound on the jack-spools from which they are spun at the mule.

The range of numbers of woolen yarns of this class is from $\frac{1}{2}$-run to 10-run for ordinary commercial purposes, which approximately corresponds to from $2\frac{1}{2}$-cut to 50-cut in the Philadelphia, or cut, system of numbering. In isolated cases, woolen yarns are spun finer than 10-run, but these yarns do not usually come on the market, being generally used by the mills producing them.

8. The Belgian System.—The only difference between common woolen yarns and woolen yarns made on the Belgian system is in the means of producing the roving at the card; in this system the Belgian condenser, or Bollette steel-tape condenser, is used to divide the web into the separate rovings required for spinning. The yarns are often sold under the name of Belgian-system woolen yarns, although they do not greatly differ from ordinary woolen yarns spun from the same stock and under the same general conditions.

9. The Saxon System.—The difference between yarn spun on the Saxon system and other yarns is also in the method of making the rovings at the card. For yarns made on this system, the web is divided by narrow leather belts, the rovings being afterwards condensed by rub rolls or aprons, or both.

10. Woolen yarn can easily be distinguished from worsted yarn by the rough, oozy appearance of the former, the fibers projecting from its surface, and by the comparative weakness of its thread.

It is more difficult to determine, by an examination of the yarn, to which system a woolen yarn belongs—ordinary, Belgian, or Saxon—since all three classes of yarns have a general resemblance and each can be made from various

Digitized by Google

grades of wool or various mixtures of wool and other materials. Woolen yarns belong to the condensed and spindle-drawn class of yarns as distinct from the roller-drawn yarns. All woolen yarns are carded and mule-spun. When examined in the condition in which they leave the spinning machine, they are generally on wooden bobbins, but may be on paper tubes.

WOOLEN YARNS CLASSIFIED ACCORDING TO FORMS IN WHICH PUT UP

11. Among the forms in which woolen yarns are found are *bobbins*, *dresser spools*, *beam warps*, *conical* and *parallel tubes*, and *cops*.

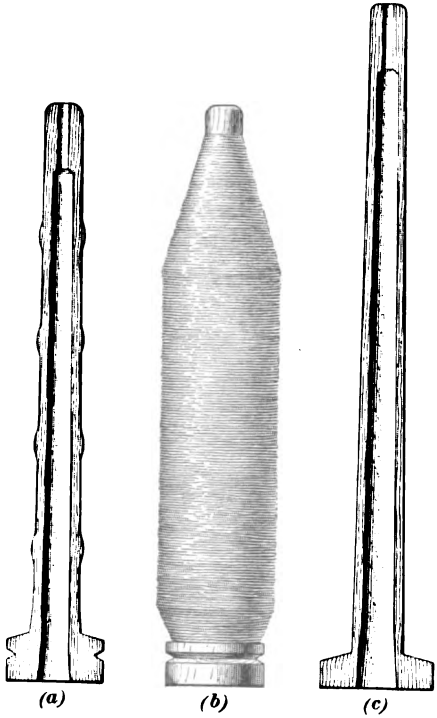

FIG. 1

12. Bobbins.—The bobbin, by which is meant the spinning bobbin, is the form in which most single woolen yarns are put up as they leave the spinning mule. Two styles of bobbins are used, as shown in Fig. 1; (*a*) is a section through a regular woolen filling bobbin empty, and (*b*), a bobbin filled with yarn. The yarn is laid on the bobbin with a short traverse, commencing near the base, and extending to the nose, from which the yarn is unwound in the shuttle. The woolen warp spinning bobbins are of two styles, the more common type being similar to (*a*), but having a corrugated surface and no groove at the bottom. Another

Digitized by Google

style, which has a smooth surface, is shown at (*c*); this bobbin is often used for knitting yarn as well as warp yarn. The warp yarn is built up on this bobbin with a short traverse gradually rising until the nose of the bobbin is reached, and the yarn is unwound from the nose at the spooler.

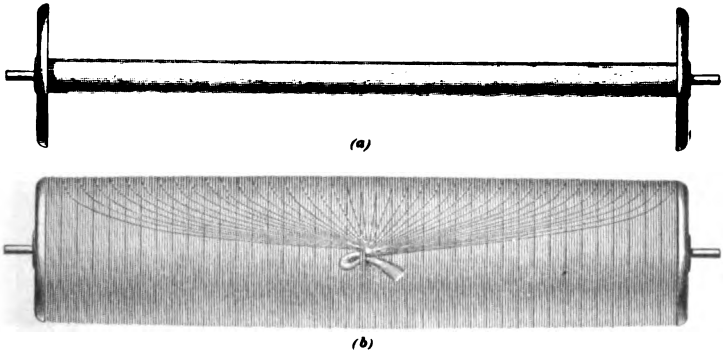

FIG. 2

13. Spools.—The spool on which woolen warp yarn is put up is shown in Fig. 2, (*a*) being an empty and (*b*) a full spool; it is a long double-headed bobbin about $2\frac{1}{8}$ inches in diameter at the barrel and with a distance of 40 or 48 inches

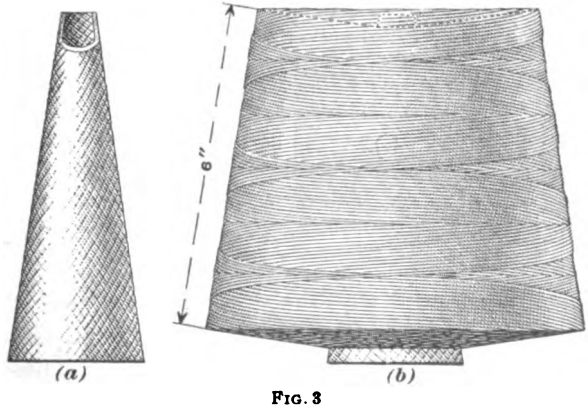

FIG. 3

between the heads. A large number of ends are wound on this spool, usually 40 or 48, which are given only a slight traverse during the winding, so that the spool really consists

Digitized by Google

of a number of ends wound side by side. Other names for this spool are *jack-spool* and *dresser spool*.

14. Beam warps are the form in which woolen yarn is finally put up for use at the loom in weaving, but as yarn is not often sold in this form, no description is necessary.

15. Cones and Tubes.—Woolen yarns are often supplied on conical tubes for knitting purposes and, less frequently, are put up on parallel tubes. The coned form is shown in Fig. 3 and the parallel tube in Fig. 4, (*a*) representing the empty tube, and (*b*) one filled with yarn, in each case.

16. Cops.—Woolen yarns are sold in the cop in either of

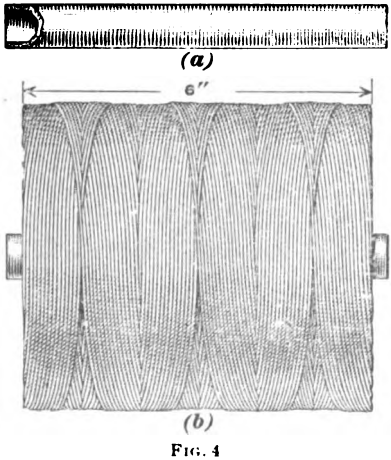

FIG. 4

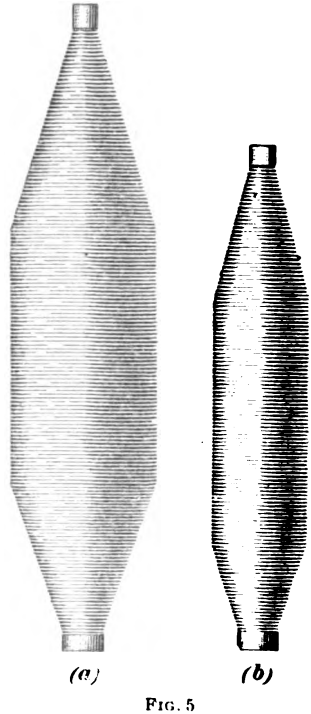

FIG. 5

two forms: (1) mule cops and (2) carpet cops. Merino yarns are often spun at the mule on a paper tube sufficiently long to project through the cop at each end. These cops are larger in diameter than the regular woolen spinning bobbin and are used for convenience in transporting yarns to knitting mills. A common style of merino cop is shown in Fig. 5 (*a*), while a smaller mule cop of filling yarn

Digitized by Google

produced in some branches of the so-called woolen industry, especially in the vigogne-yarn and imitation vigogne-yarn trade, is shown in Fig. 5 (*b*). This is also built on a paper tube. The carpet cop, which is wound on a special machine, is shown in Fig. 6, and is entirely different from the mule cop. It is held in the shuttle by means of an elastic strap and woven from the inside of the cop, commencing at the bottom.

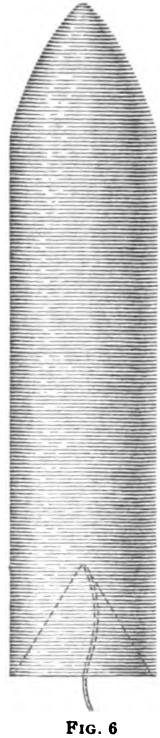

FIG. 6

WOOLEN YARNS CLASSIFIED ACCORDING TO THEIR USE

17. Woolen yarns, in common with most yarns, are spun mainly for weaving, in two varieties—warp and filling. A considerable quantity of woolen yarn is also spun for knitting purposes, chiefly in the merino yarns, which are supplied on cops or on cones. Woolen yarns are also used for filling in cheaper qualities of carpets, in which case they are usually supplied on cops. Woolen carpet yarns are sometimes sold in skeins, and are made from 40 yards per ounce to 200 yards per ounce, the most common weights being from 40 to 120 yards per ounce. The comparative lack of strength and the rough surface of woolen yarns render them unsuitable for many purposes for which cotton and worsted yarns are produced; in general, it may be stated that the use of woolen yarns is confined chiefly to weaving and knitting purposes.

WORSTED YARNS CLASSIFIED ACCORDING TO METHOD OF MANUFACTURE

18. The usual sequence of operations in the preparation of worsted yarn aims at the manufacture of a thread that shall be smooth and uniform in appearance, with the fibers arranged in parallel spirals and all short fibers eliminated. To obtain this result a combination of processes selected from

Digitized by Google

the following is used: scouring, carding, doubling, back washing, combing, preparing, gilling, drawing, roving, and spinning. Thus a number of varieties of worsted yarns are produced, according to the processes selected and the style of machine adopted for each process. The same processes cannot be used for handling all kinds of wools, as they vary in length of staple and in other characteristics; nor can the effects desired in worsted yarns for special purposes always be obtained by one method only. The differences in the sequences of processes are chiefly as follows: (1) whether the carding process is used or not (in case it is not, preparing is substituted); (2) whether the comb is used or not, and if used, the style of comb; (3) the method of spinning, whether on the cap spinning frame, ring spinning frame, flyer spinning frame, or mule.

In a general way, worsted yarns may be divided according to the operations previous to spinning into four classes: (1) prepared yarns, (2) yarns made on the Bradford system, (3) yarns made on the French system, and (4) uncombed worsted yarns. They may also be divided according to the method of spinning without regard to the previous handling of the stock into: (1) cap-spun yarn, (2) flyer-spun yarn, (3) ring-spun yarn, and (4) mule-spun yarn.

19. Prepared Worsted Yarns.—In case yarns are to be made from wools that are too long to be put through the card, especially English wools, American or Canadian braid wools, and luster wools, they are prepared for combing by what is known as a preparing set of gill boxes, and are afterwards combed, drawn, and spun, without being subjected to a carding process, thus distinguishing them from other worsted yarns. Although they are here spoken of as prepared yarns, this name is not often used commercially; they are more generally described with reference to their appearance or their future use, such as luster yarns, braid yarns, or carpet yarns.

Prepared yarns are made from coarse, long-stapled, lustrous wool, and have a distinctive appearance on account of their

Digitized by Google

luster. This quality is not especially given to the yarn by the preparing process, but is a natural feature of the long and coarse wools from which these yarns are made. Prepared yarns may vary from low to medium numbers, but are made largely in coarse, high-grade, carpet yarns and braid yarns; they may run as high as number 40s, and from that downwards as coarse as is desired.

20. Worsted Yarns Made on the Bradford System. The term **Bradford system** applies to the ordinary process of producing worsted yarns. It derives its name from the system widely used in the Bradford district of England, and for this reason is sometimes called the English system. The wool for yarns made on the Bradford system is both carded and combed; it then passes through the ordinary processes of drawing, and may be either cap-spun, flyer-spun, or ring-spun. The term Bradford system applies more to the series of drawing and spinning processes after the combing than to the methods of carding and combing.

Worsted yarn spun on the Bradford system is smooth and uniform in appearance, the fibers being laid parallel to each other in the direction of the thread; the yarn generally exhibits a well-defined luster and is strong and elastic. The luster is not so great as in the case of the prepared yarns, which affords one means of distinguishing the Bradford-system yarns from the prepared yarns.

Bradford-system worsted yarns may also be subdivided into several classes, depending on the method of spinning the thread—whether on a cap spinning frame, a flyer spinning frame, or a ring spinning frame. The bulk of the yarn spun on the Bradford system is spun on a cap spinning frame, since the production of this machine is greater than that of the flyer spinning frame. Cap-spun yarn, however, is much more apt to exhibit a *beard* than flyer-spun yarn, that is, have numerous projecting fibers. Flyer-spun yarn is smoother, softer, has less twist, and is more even than cap-spun yarn. Ring spinning is not yet on a commercial basis, although there is some ring-spun yarn made. The

Digitized by Google

bulk of worsted yarn is spun on the Bradford system in numbers ranging from 12s to 60s.

21. Yarns Made on the French System.—The French system of manufacturing worsted yarns—generally called **French spinning**—differs from the Bradford, or English, system to a considerable extent in the drawing processes as well as in the spinning. It derives its name from the fact that it was largely developed in France, and the machinery for it made in one of the former French provinces (now a part of Germany); the yarns themselves are spoken of as **French-spun worsteds.** In this system, nearly every drawing process employs a peculiarly constructed roll, called a *porcupine*, filled with sharp needles for separating and straightening the individual fibers of the sliver, whereas in the Bradford system traveling bars, called *fallers*, set with needles are employed. French-spun yarns are spun on a mule in the form of a cop built up on a long, thin, paper tube. They can thus be distinguished from worsted yarns spun on other systems by the form of the tube on which they are spun, since the yarns made on other systems are either on wooden bobbins or paper tubes of large diameter. French-spun yarns are made to a considerable extent in America. Yarn spun on this system is softer, more bulky, and more elastic than worsted spun on other principles and generally has less twist per inch. The stock used for French spinning is either X, XX, delaine, or Australian, and the yarns are made in various numbers from 20s to 80s, according to the stock used. It is not necessary, however, to use only long-stapled wool in their production, since comparatively short fibers can be worked up in this way. This yarn is particularly suitable for the production of soft, fine, worsted goods, especially ladies' dress goods, and also makes excellent knitting yarn.

22. Uncombed Worsted Yarns.—Uncombed worsted yarns are prepared by a sequence of processes from which the combing is omitted; they are carded, drawn, and spun somewhat similar to the Bradford-system yarns. Owing to the omission of the combing process, they are more uneven

Digitized by Google

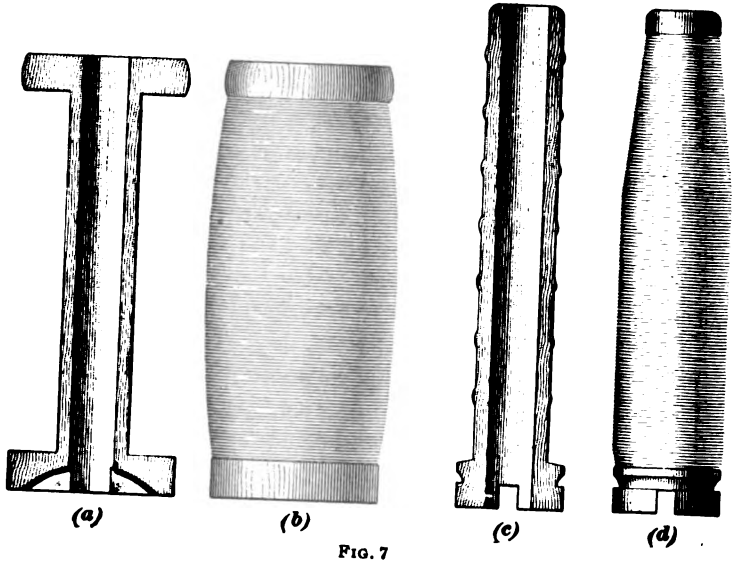

FIG. 7

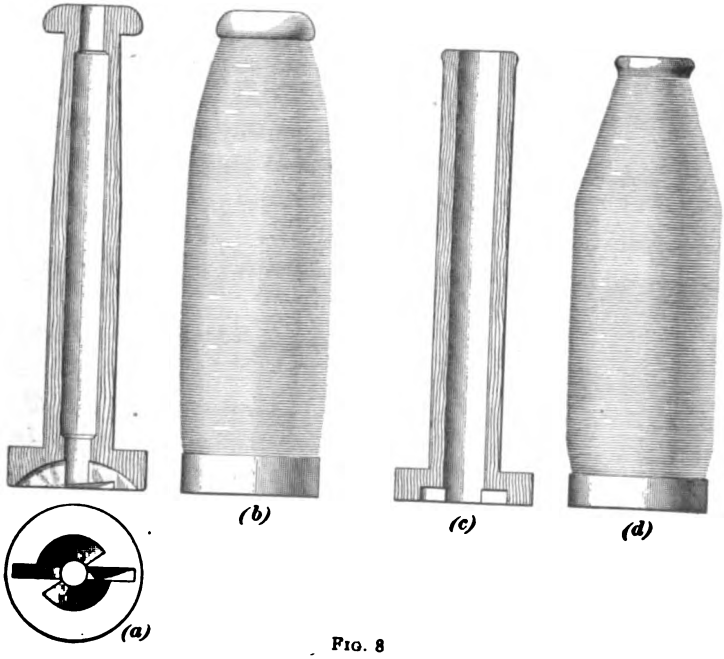

FIG. 8

Digitized by Google

and irregular than the ordinary types of worsted yarns and bear more resemblance to a woolen yarn than does a true worsted. Uncombed worsted yarn contains short fibers, which in an ordinary worsted yarn would have been removed in the combing process. Strictly speaking, such a yarn ought not to be classified with either worsted or woolen yarns, since, in the usual acceptation of the definition, worsted yarn is always a combed yarn and woolen never a roller-drawn yarn; for convenience, however, these yarns are classed with the worsted yarns, although they are sometimes given the distinguishing name of *half-worsted* or *semi-worsted*. They are spun in coarse numbers and can be distinguished from other worsted yarns by their lack of luster and smoothness, and are generally used in the carpet trade.

23. Worsted Mixture Yarn.—Fancy mixtures of different-colored fibers are frequently made in worsted yarns, especially for knitting purposes. In making worsted mixtures, the blending takes place later in the series of processes than in the case of woolen mixtures, it generally being done after the combing. The word mixture in connection with worsted yarns has the same meaning as in connection with woolen yarns; namely, a blend of different colors, unless specially qualified as a worsted-and-cotton mixture; this latter, however, is seldom made.

WORSTED YARNS CLASSIFIED ACCORDING TO FORMS IN WHICH PUT UP

24. Worsted yarns are put up on *bobbins*, *cops*, *spools*, *cones*, *tubes*, *warp beams*, and in *skeins*.

25. Bobbins.—By a **worsted bobbin** is generally meant a *spinning bobbin* on which the yarn has been spun, or a *twister bobbin* on which the yarn has been wound after being doubled to make a two-, or more, ply yarn. The spinning bobbin may be either a double-headed bobbin, as shown in Fig. 7, in section at (*a*) and filled with yarn at (*b*); or a single-headed, as shown in Fig. 7, in section at (*c*) and filled with yarn at (*d*). The double-headed bobbin

Digitized by Google

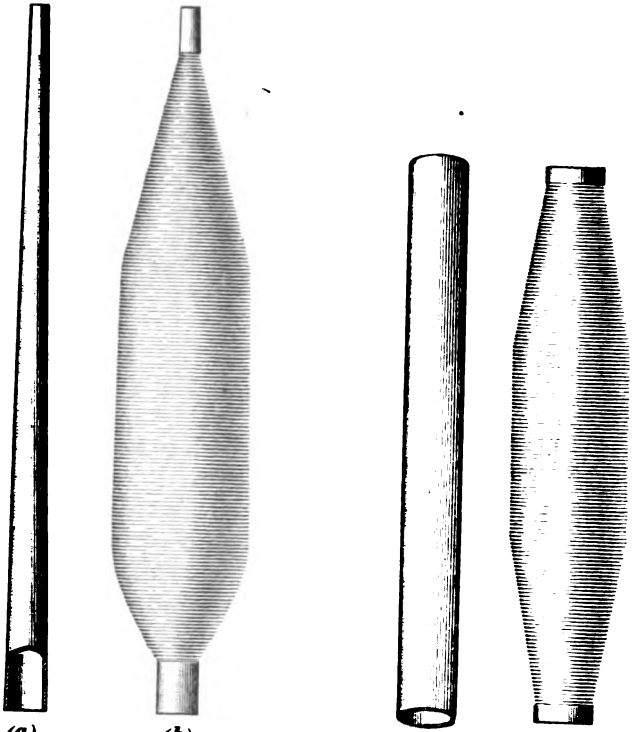

FIG. 9

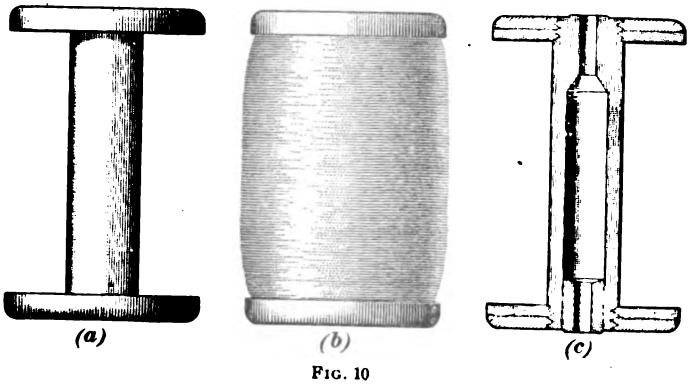

FIG. 10

Digitized by Google

is customarily used for warp, while the single-headed bobbin is filled with filling yarn and used in a shuttle.

Twister bobbins may be either double-headed, as shown in Fig. 8, in section at (*a*) and filled with yarn at (*b*); or single-headed, as shown in Fig. 8, in section at (*c*) and filled with yarn at (*d*).

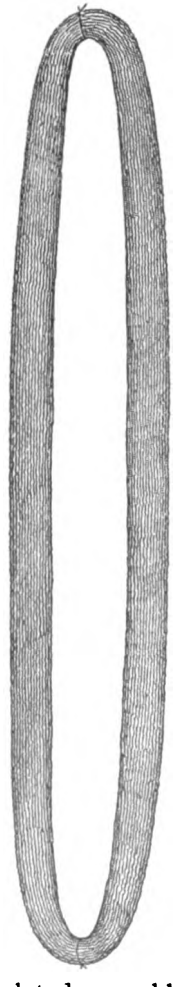

26. Cops.—A worsted cop is the form in which single yarn is delivered from the mule in the case of mule-spun worsteds. It is built up in a cylindrical form, coned at each end, on a long, thin, paper tube, shown empty in Fig. 9 (*a*) and filled in view (*b*). Shorter tubes of larger diameter used for frame spinning are shown empty in Fig. 9 (*c*) and filled in view (*d*). These are sometimes called *cannettes*.

(*a*) (*b*) FIG. 11

27. Spools.—Worsted yarn is spooled in two forms; the spool, shown in Fig. 10, is similar to the regular cotton-warper spool and is used to form a convenient method of transporting worsted yarn for sale, since from this spool the yarn can be conveniently made into a warp; the other form of spool used for worsted yarn is the regular jack-spool or dresser spool, shown in Fig. 2.

28. Skeins.—Worsted yarns are skeined by being wound around the revolving swift of a reel; the skein when completed resembles the illustration in Fig. 11 (*a*). This is twisted several times and doubled upon itself, when the excess twist causes it to form into a firm roll, similar to Fig. 11 (*b*),

Digitized by Google

suitable for packing and transportation. The circumference of a skein of worsted is generally 72 inches, although other dimensions can be arranged. The length, except when otherwise specified, should be understood as 1 hank, or 560 yards. Worsted yarns are generally put up into skeins for dyeing purposes, one form known as the Balmoral skein being intended for random dyeing, that is, dyeing several colors in one skein.

29. Parallel and conical tubes are used to a considerable extent in the worsted trade. Knitting yarns are often coned.

30. Beam Warps.—The information given regarding woolen beam warps is applicable to worsted.

WORSTED YARNS CLASSIFIED ACCORDING TO THEIR USE

31. Worsted yarns, as well as woolen yarns, are spun mainly for weaving, in two varieties—warp and filling. Considerable quantities of worsted yarns are also used for knitting purposes, including the so-called worsted merino yarn made of combed cotton and combed wool; knitting yarns are supplied in cop, cone, or skein. Worsted yarns are used very extensively for carpet making, especially for the higher-grade carpets; the worsted appears on the face of the various styles of carpets, both as cut and uncut pile, while the backing is often of cotton, linen, or some other vegetable fiber. Worsted carpet yarns are put up in skeins. They are generally made on the straight, prepared system and may be said to be coarse yarns, below, say, 16s. Rug and fringe yarns are usually made of worsted, in coarse numbers, and are often 3-ply skein yarns, although they are made 2-, 3-, or 4-ply as required. Worsted yarn is also made in limited quantities into harness thread, sewing thread, seaming thread, etc.

WOOLEN AND WORSTED PLY YARNS

32. The foregoing descriptions of woolen and worsted yarns apply to single yarns, but any woolen or worsted yarn can be made into ply yarn; in fact, it is very common to

Digitized by Google

make worsted into ply yarns, more so than is the case with woolen yarns, except those for fancy double-and-twists. The term ply is not so frequently applied to woolen yarn as is the name double-and-twist, which indicates that two threads are doubled and twisted together at the same time. In worsted yarns, especially those made on the Bradford system, the process of doubling is fairly common also, as 2-ply yarn is generally used for worsted warps.

WOOLEN AND WORSTED YARNS CLASSIFIED ACCORDING TO SIZE

33. The expressions coarse, medium, and fine yarns are occasionally applied to both woolen and worsted yarns, but it must be understood that when these terms are used no definite size of yarn is referred to, since the terms are necessarily somewhat vague and indefinite; considerable leeway must therefore be allowed. For instance, a woolen yarn that a mill running on coarse cheviots and tweeds would consider fine would be thought a very coarse yarn in a mill running on fine dress goods or flannels; or in the case of worsted yarn, a yarn might be considered as fine in a carpet mill and as coarse in a fancy-dress-goods mill. Striking a general average, however, it may be stated that woolen yarns up to 4-run, or about 21-cut, are considered as coarse yarns, while those from 4- to 8-run, or from about 21- to about 43-cut, are considered as medium, although in many woolen mills an 8-run yarn is considered very fine. Woolen yarns above 8-run, or about 43-cut, are in almost every instance considered as fine yarns. Worsted yarns may be considered as coarse when spun into counts below 16s, while medium worsted yarns include those from 16s to 40s. Any worsted yarn above 40s will almost always be considered as a fine yarn.

Digitized by Google

YARNS PRODUCED FROM HAIR

34. Mohair yarns are produced from the fleece of the Angora goat, which is a fine, silky fiber closely resembling wool in its spinning properties. The source of supply formerly was Asia Minor, and considerable mohair is still obtained from there, but of late years the Angora goat has been introduced into the United States, France, and Spain, and Angora wool, or mohair, is now obtained from these countries. The principal characteristics of mohair are its luster and resistance to crushing, so that fabrics made from it cannot readily be creased. The fiber varies in length from 4 to 10 inches, the general length being about 5 or 6 inches; it is pure white, fine, curly, as well as lustrous. No classification of mohair yarns dependent on the source or origin of the material is customary, nor are they classified according to the method of their preparation or treatment after spinning, as in almost all cases they are made on the worsted principle. When delivered in the form in which it is spun, mohair yarn is on paper tubes or bobbins; it is also delivered on 6-inch warper spools or on dresser spools, and both in single and ply yarns. Its use is chiefly for weaving purposes, especially for dress goods, plushes, and part-silk goods. The luster and tendency to curl make it a suitable material from which to make certain novelty yarns, especially loop, or bouclé, yarn. Mohair yarns are produced in various numbers, up to as high as 36s.

35. Alpaca yarns are those produced from the fleece of the alpaca sheep, which from the fact of its resemblance both to a camel and a sheep is sometimes called the camel-sheep. The fleeces of the llama and guanaco, although not true alpaca, are often classed and used with alpaca. Alpaca is either white, red, brown, or black, is as long as 6 or 8 inches, somewhat fine, and generally spun alone into yarns intended for use in dress goods. The manufacture of this yarn is a small industry and is conducted on similar lines to the worsted- and mohair-yarn industry.

Digitized by Google

36. Vicugna yarns are now seldom manufactured; the true vicugna yarn is made from the fleece of an animal belonging to the camel-sheep variety, and is very lustrous, extremely fine and soft, and reddish brown in color, if undyed. This yarn should not be confused with vigogne and imitation vigogne.

37. Cashmere, or Tibet, Yarns.—Cashmere yarns are those spun from the hair of the Cashmere goat; this is an exceedingly soft, silky fiber, and when pure is of considerable value. The manufacture of these yarns is so small an industry as to be of no commercial importance.

38. Other animal fibers are camel hair, cow hair, and the fur of various animals, domesticated and otherwise. These are not generally used alone for spinning into yarn, but are used for adulterating woolen yarns.

39. Horsehair is not generally spun into yarn, but the mane and tail hairs are used alone as filling and sometimes as warp for such fabrics as coverings for the seats of chairs, for strainers, etc.

SILK YARNS

CLASSIFICATION BY RAW MATERIAL

40. The most valuable yarns known in the textile trade are **silk yarns**, the appearance of which is sufficiently familiar to render an extended description unnecessary. The features that give silk yarn its value are an intense luster, great strength in proportion to its size, as well as softness, elasticity, and durability to such an extent as cannot be found in any other material. Silk yarns are very suitable for dyeing, giving brilliant shades in all colors, and fabrics of silk have a rustling property, or *scroop*, not common to any other material.

41. Cultivated and Wild Silk.—All silks may be divided in two main classes: (1) cultivated silk, sometimes known as mulberry silk, and (2) wild silk, often called Tussah silk, although this is only one variety of wild silk. Silk yarns may therefore be classified according to the kind

Digitized by Google

of silk used in their manufacture, as: (1) yarns from cultivated silks, and (2) yarns from wild silk. The cultivated silk is produced by the caterpillar of the *Bombyx mori*, the silk moth. Wild silk is produced principally by the caterpillar of the Tussah moth (*Antheræa mylitta*), although other varieties are produced from other moths, such as Eria silk, Fagara silk, Murga silk, Atlas silk, Yama Mai, and others.

Yarns produced from cultivated and wild silks, if undyed, are readily distinguished by the color. Cultivated silks in the natural state are a bright yellow, while by scouring, various shades from yellow to pure white are produced, according to the amount of coloring matter removed from the raw silk. The wild silks are always of a dark color, in some cases approaching a brown. The cultivated silks also are superior in luster, softness, and elasticity to the wild silks.

42. Classification of Silk Yarns According to the Country of Origin.—The countries from which the largest supplies of silk are obtained are China, Japan, Italy, France, Austria, Spain, and the United States. The production is greatest in China. In describing raw silk, the name of the country or district in which it is produced is used to a large extent, as is also the name of the port from which it was shipped; thus, there are Japanese silks, China silks, Italian silks, etc., with subdivisions such as Tsatlee and Canton silks, which are varieties of China silk. Owing to the fact that all cultivated silks bear a decided resemblance to one another and that after they are scoured and made into a thread the difference is not sufficiently great to retain the geographical name that was used to describe the raw material, such a classification of silk yarns is not made to any extent; they are classified rather according to the method of preparation or treatment of the yarn.

CLASSIFICATION ACCORDING TO METHOD OF PREPARATION

43. The essential differences in silk yarns, from both wild and cultivated silks, are due more to the differences in their manufacture than to anything else. This determines a

Digitized by Google

primary classification depending on the treatment of the raw stock, one class, called *thrown silk*, consisting of yarns that are produced by the processes of reeling and throwing, and the other, called *spun silk*, consisting of yarns spun from waste raw silk. Thrown silk may be further divided according to the number of silk fibers combined to form one thread and the method of twisting adopted in producing this thread, or according to the extent of the scouring to which the silk has been subjected.

44. Thrown Silk.—A fiber taken from one silk cocoon consists of two single filaments held together by a gummy matter and is of great length, from 300 to 1,000 yards of good silk being obtained in a continuous thread from one cocoon. There is a much greater length than this on the cocoon, but it is not possible to obtain it in a continuous thread; the waste is used for spun silk. It is not customary, however, to take the individual fiber as a basis of preparation for making a silk thread, but to unwind several of these at one time, varying in number, from five to eighteen, to form one loose, even strand, termed a **single.** The process of obtaining these singles is known as *reeling;* this gives the name *reel* silk, often applied to thrown silk. The number of fibers composing the strand is not the same at all points, since, as the individual fiber varies in thickness, at some parts more filaments are used than at others, in order to produce a single that shall be even throughout its length. By the process known as *throwing* these singles are made into two classes of yarn: (1) **organzine** and (2) **tram.** These are used in largest quantities for weaving purposes, the organzine being used chiefly for warps and the tram for filling. The most perfect cocoons are selected for the manufacture of organzine, which is produced by first taking several singles, twisting each in the same direction, and then twisting these singles together in the opposite direction. Tram silk is made from less perfect cocoons with a smaller number of ends and less twist. In addition to tram and organzine, other yarns are also made from silk, such as embroidery, French,

Digitized by Google

sewing, knitting, and machine twists, which differ chiefly in the number of strands used to make the final thread and the method of twisting them.

Neither trams nor organzines are all silk; about 30 or 40 per cent. is the gummy matter that holds together the two filaments forming the real silk. The amount of scouring, or boiling off, to remove this foreign matter determines four classifications: (1) hard silk, the term applied to silk after it has been reeled from the cocoon and before it has undergone any boiling-off process; (2) écru silk, which is silk that has been boiled sufficiently to remove about one-twentieth of the gum; (3) souple silk, which has been boiled sufficiently to remove about one-sixth of the gum; and (4) boiled-off silk, from which the gum has been completely removed. In both écru and souple silk, sufficient boiling is introduced to produce the luster characteristic of silk, although they differ in regard to the amount of gum removed. The first class is the darkest yellow and least pliable of silks, while the fourth class is the lightest in color and has the characteristic luster to the greatest degree. The other two classes are situated between these, both as to luster and color.

45. Spun Silk.—The thrown silks, such as the tram, organzine, and others, are often called *spun silks*, but this use of the term is erroneous; **spun silks** should be applied only to silks that are actually spun, and this is not the case with thrown silks, which are simply reeled and afterwards passed through a twisting process or processes. There are two grades of spun silk: *schappe* and *bourette*. **Schappe**, sometimes called chappe, florette, or filoselle silk, is made from silk waste from the fibrous portion of the cocoons that it is not possible or desirable to unwind in order to produce tram or organzine. The manufacture of these yarns includes the processes that break up the long silk fibers into short lengths, which are spun by a series of processes bearing some resemblance to those required in the manufacture of woolen and waste cotton yarns.

Digitized by Google

The waste made at schappe-spinning processes is again worked up into a still coarser yarn, which is known as **bourette** silk.

Tram and organzine silks bear considerable resemblance to each other in their appearance; the examination of either of these yarns shows continuous fibers that can readily be separated from the thread. Schappe silks show a more solid construction of thread, resembling a cotton or worsted yarn more than the tram and organzine silks; bourette yarns are coarse, lumpy, uneven threads.

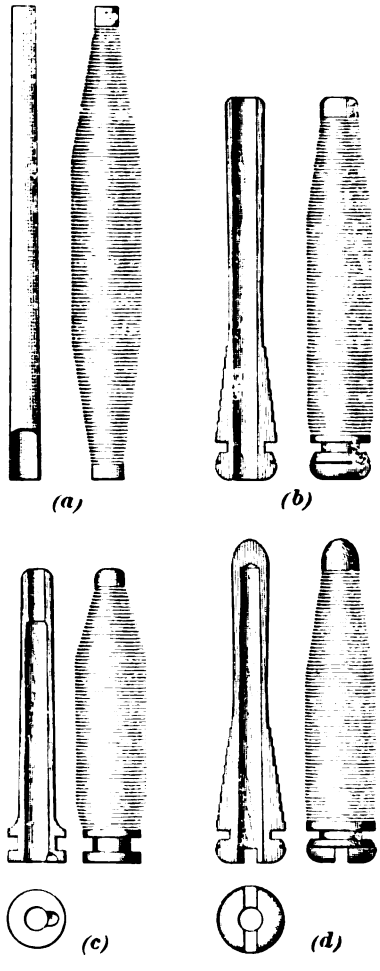

FIG. 12

SILK YARNS CLASSIFIED ACCORDING TO FORMS IN WHICH PUT UP

46. Silk yarns are found in *cops*, *spools*, *skeins*, *quills*, *cones*, *tubes*, and in *warps*.

47. **Cops,** usually known as **pin cops,** are wound on through paper tubes and are of a small size suitable for the shuttle, as shown in Fig. 12 (*a*).

48. **Spools** are the usual construction of double-headed bobbins and are used at various processes in the spinning, doubling, or winding of the yarn.

49. Silk **skeins** are formed in the ordinary way, so as to produce a continuous coil of thread.

Digitized by Google

50. The **quill, or filling, bobbin** for silk is small compared with that for other yarns; various kinds are shown in Fig. 12 (*b*), (*c*), and (*d*).

51. Parallel and Conical Tubes.—Silk yarn is sometimes put up in parallel and conical tubes.

52. Warps.—Silk yarn is, of course, made into warps for weaving purposes, but this form is not one in which silk is usually bought and sold, so that in this connection nothing need be said regarding them.

USES OF SILK

53. The uses of silk are chiefly: (1) for weaving, organzine being used as warp and tram as filling; (2) for the making of sewing, embroidery, and other threads that in the silk trade are generally known as twists; and (3) as knitting yarn for high-grade hosiery and underwear.

YARNS FROM MINERAL FIBERS

54. Asbestos yarns are the principal yarns produced from mineral fibers. Asbestos, which is a mineral found in the United States, Canada, Italy, and other countries, consists of a mass of short fibers that are separable into filaments of as great a length as 2 inches. These it is possible to spin into yarn that may be woven into cloth. Asbestos yarn is usually coarse and of a whitish or grayish appearance. It is incombustible, which is its chief value, and for this reason is used for making yarns and fabrics that must stand intense heat.

55. Wire Yarns.—Although hardly a suitable name, the term **wire yarns** is intended to cover very finely drawn wires and ply strands made from wires. The metals chiefly used for this purpose are gold, silver, gold- or silver-plated copper, iron, copper, and brass. The chief use of such metallic wires in the textile industries is in the very finely drawn and rolled gold and silver threads for ornamental

Digitized by Google

purposes, which are usually put up on small spools and commonly called *tinsel;* iron, steel, brass, and copper wire is woven into screens and wire cloth for various purposes.

56. Glass Yarns.—Glass has occasionally been used for thread making. When softened by heat it can be drawn out into very fine threads from which it is possible to make yarns that under certain circumstances can be incorporated with yarns of vegetable or animal fibers. The production of glass yarns, however, is of no commercial importance.

YARNS WITH SPECIAL CHARACTERISTICS

CLASSIFICATION ACCORDING TO TREATMENT AFTER SPINNING AND TWISTING

CONVERTED YARNS

57. There are a number of processes through which single yarns may pass after the spinning: (1) several threads may be combined either as ordinary ply yarn or in some form of novelty yarn, the result of which is a complete change in construction; (2) the yarn, either single or ply, may be operated on so as to change the form in which it was originally put up to a form ready for the market or for some succeeding process, without, however, in any way changing its appearance or construction; (3) the yarn may be passed through one of the various converting processes, thus changing its appearance definitely and decidedly, but leaving its construction unaltered; to be so treated the yarn may be taken in the condition in which it leaves the spinning machine, but more frequently it is converted after having passed through some winding or form-changing process. It is entirely outside the scope of this Section to fully describe any of the various converting processes for yarn, as it is the purpose of this Section to describe only the differences in the threads as they are found to exist; therefore, only a brief

Digitized by Google

definition will be given as to how to distinguish between yarns that have and have not been processed, or between yarns that have gone through different processes.

58. Dyed yarns are those that have passed through processes that impart color to them. They may have passed through only one process, for giving what is known as a one-bath or one-dip color, succeeded, of course, by drying, or they may have passed through several processes, for the purpose of first scouring, washing, or bleaching, then mordanting, and afterwards dyeing and drying. Dyeing is performed on practically every variety of yarn made from vegetable or animal fiber, whether cotton, wool, silk, flax, linen, or jute. Yarns made from mineral fibers are not dyed. The term dyed yarns is a general one that may be made more definite by classifying yarns as *skein-dyed*, *warp-dyed*, *cop-dyed*, *sliver-dyed*, *raw-stock-dyed*, *slub-dyed*, etc., according to the period in the process of manufacture at which the dyeing was done. **Skein-dyed** yarn, sometimes called *hank-dyed*, is yarn that has been skeined before being dyed. **Warp-dyed** yarn, sometimes called *ball-dyed*, or *chain-dyed*, is yarn that has been put up in the form of a warp before being dyed. **Cop-dyed** yarn is yarn that has been dyed in the same form in which it leaves the spinning mule by placing it on perforated tubes and forcing dye liquor through a number of these tubes. **Stock-dyed** yarn, spoken of as *raw-stock-dyed* yarn, or in the case of cotton as *raw-cotton-dyed* yarn, is yarn in which the fiber is dyed in the raw state—in the case of wool, immediately after scouring, and in the case of cotton, immediately after the opening process. **Sliver-dyed** yarn refers to cotton that has been dyed in the form of a card sliver. **Top-dyed**, or **slub-** or **slubbing-dyed**, refers to worsted that has been dyed in the form of a top, or slubbing.

59. Dyed and weighted yarns comprise those that have purposely had their weight increased during the dyeing process; they are usually silk yarns.

60. Bleached Yarns.—Bleaching yarns is a process or combination of processes necessary to give a white, or as

Digitized by Google

nearly as possible a white, appearance to yarns. Bleaching is generally performed on cotton, linen, or other vegetable yarns, while wool, silk, and other animal fibers do not readily lend themselves to any process of producing an absolutely white thread, beyond that of washing or scouring off the foreign substances adhering to their surface, although processes of obtaining a yellowish white in the cloth are not unknown. This is sometimes done in the yarn, in which case it is bleached, usually with sulphurous acid either in a liquid or gaseous form, generally the latter. Woolen and worsted yarns are also bleached when delicate colors are to be dyed. The process is sometimes called *stoving* when woolens are bleached with the sulphurous-acid gas.

Cotton is subjected to various kinds of bleaching processes, known as *quarter bleach*, *half bleach*, *three-quarter bleach*, or *full bleach;* the last, which gives the whitest appearance, is especially applied to Egyptian cottons to remove the brown tint natural to that cotton fiber. In speaking of bleached cotton yarns it is advisable to use the word *bleached* and also state whether quarter, half, three-quarter, or full bleach is meant. The name *white* cotton yarns is not always sufficient to indicate bleached yarns, as white is sometimes applied to cotton to indicate yarns in the natural state spun from white cottons, such as American or sea-island, as distinguished from yarns in a natural state spun from brown cotton, such as Egyptian, Peruvian, and certain kinds of Indian and Central American cottons.

The flax fiber in the form of linen yarn lends itself to bleaching, although it is a more difficult process than that of bleaching cotton yarns. Bleached linen yarns are spoken of when only partially bleached as *half white*, or *cream color;* when bleached to a higher degree, as *three-quarter white;* and when completely bleached, as far as is commercially customary, as *full white*.

61. Scoured Yarns.—In the manufacture of woolen and worsted yarns, raw wool is always subjected to a preliminary scouring, or washing, process to remove the dirt

Digitized by Google

and the natural grease, or yolk, with which the wool is impregnated, but this is separate and distinct from the scouring process as applied to yarns. During the manufacture of the yarns various oils and emulsions are applied to aid in the working of the stock and preserve the fiber from injury. In the case of woolen yarns this oil or emulsion is not removed when the yarns are put on the market for sale; that is, it may be stated that woolen yarns are practically always sold in a greasy condition, or *in the grease*. Worsted, however, is frequently subjected to a scouring, or, as it is called, a *back-washing*, process after carding or combing, for the purpose of removing any artificial impurities that may be in the stock and rendering it as nearly white as possible. This scouring, or back-washing, process is merely a treatment with warm water and soap or other detergents, and is in reality simply a washing process. Worsted yarns are also frequently sold without being back-washed, but in this case they are not nearly so white, and in fact at the best they possess only a yellowish shade.

Certain varieties of silk are scoured, or, as it is termed, *boiled off*, in order to remove the gum found on the raw silk, and in this process they lose from 15 to 30 per cent. of weight. They are spoken of as *stripped*, or *boiled-off*, silks. Milder processes that do not completely strip the fiber but rather tend to bleach both the fiber and the gum attached to it are known as *scouring*.

62. Mercerized Yarn.—Mercerizing is a process applied only to cotton yarns, and consists of a treatment, while under tension, with a solution of caustic soda that gives a silky luster to the thread. These yarns are usually either bleached, dyed, or bleached and then dyed. Unless otherwise stated, mercerized yarns are generally understood to be mercerized in the skein, although it is done in the warp form. This class of yarns is almost always 2-ply, as there is a risk of stretching a single yarn and making it uneven or damaging it in the process of mercerizing. As this process requires that the yarn shall stand

Digitized by Google

considerable strain and yet the effect produced be that of a soft, pliable, elastic yarn resembling silk, it is necessary that the yarn should be strong and yet soft spun. For this purpose very good cottons are used, even for coarse and medium numbers of yarns, Peelers, Egyptian, and sea-island often being the stock selected; thus, although the turns per inch are few in proportion to the counts, a strong yarn is obtained.

63. Printed yarns are those that have been passed through a printing machine, and may be either warp-printed or skein-printed. The effect of the printing process is to impress short dabs or long blotches of color on the threads, the intervals being left white or the original color of the skein or warp. Either one, two, three, or four colors may be imprinted on the yarn, thus giving it a mottled appearance, which is accentuated when the yarn is interwoven with other yarns, and thus produces a speckled effect on the fabric.

It is cotton yarn that is usually used for printing purposes, although any yarns having a moderately smooth surface, such as linen, jute, silk, etc., may be used. Woolen and worsted yarns, owing to the nature of the thread, do not receive such a clear and satisfactory impression of the printing rolls as a comparatively smooth yarn like cotton. Before printing, yarns must be reeled into skeins or made into warps.

64. Glazed and Polished Yarns.—Polished yarns, or, as they are sometimes called, **glazed yarns,** or **glazed and polished yarns,** are those that have been passed through a process of applying a dressing material to the yarn and then brushing it until a high glossy polish is attained. Polishing is chiefly used in giving to sewing thread what is known as a *bright finish*. Polished yarns are often dyed yarns. The polishing process is a mechanical one, which distinguishes it from the method of obtaining a luster on cotton yarns by mercerizing—an entirely different process that depends on chemical action.

Digitized by Google

65. Gassed, or Genapped, Yarns.—All yarns have, to a greater or less extent, loose ends of fibers projecting from their surface. These are found to the least extent in yarns made by the multidrawing system and to the greatest extent in those that are made by the condensing, or woolen, principle of yarn preparation.

In yarns made from sheep's wool, it is found to the least extent in worsted yarns, and to the greatest extent in the ordinary woolen yarns. In woolen yarns, imitation vigogne yarns, and those of a similar character, the oozy construction and projection of loose ends of fibers is desirable and serves a definite object, but for certain purposes in the combed yarns it is undesirable and creates defects in the fabrics manufactured from them; for instance, in the making of certain kinds of laces and curtains from fine, combed-cotton yarns, the projecting fibers prevent that clear definition and sharp outline of the pattern that is desired. This oozy construction is also a disadvantage in such yarns as harness or heald yarns manufactured from worsted yarns. For this reason some cotton and worsted yarns are treated in a gassing machine, in which each thread is passed through a gas flame very rapidly, thus causing the projecting fibers to be singed off. The passage of the yarn is so rapid that the heat does not destroy or damage the thread. In the case of worsted and other yarns of animal origin, the process is called *genapping*, and gassed worsted yarns are called *genapped* yarns; for other yarns the terms *gassing* and *gassed yarns* are used.

Yarns that have been gassed or genapped are slightly brown, and the ends of the fibers are discolored. This is not detrimental if the yarns have previously been dyed a dark color, but otherwise it is desirable to pass them through some process that removes this defect; for instance, in making lace yarns it is better to gas them before the bleaching process, and in worsted yarns genapping is advantageously followed by a process of scouring or dyeing.

66. Prepared Yarns.—**Preparing** is the name usually applied to a process of coating yarns of vegetable origin

Digitized by Google

with wax or grease, sometimes accompanied by a compressing process.

67. Processed yarns is a vague name given to yarns that have passed through some private or patented process for producing some special effect or change in the yarn. It is generally a modification of mercerizing or polishing.

68. This classification of converted yarns, while by no means complete, comprises the leading processes by which yarns may be changed after spinning or twisting. While these processes cannot be considered as a part of the regular yarn preparation in a textile mill, in many mills they are classed as such.

This list is not intended to include any processes that merely change the form in which the yarn is collected or arranged or that change the structure of the thread itself.

CONDITIONING YARNS

69. Conditioning, or **damping,** yarns is accomplished by various means and for different reasons. Fibrous materials, after being exposed in the various processes to the heated atmosphere of a textile mill, lose a certain percentage of the moisture that they contained in the raw state. Most yarns, if allowed to stand in the open air or in some storehouse where they can come in contact with the atmosphere, will regain a portion of this moisture and return to a normal condition.

For various reasons, however, it is sometimes considered desirable to cause the yarn to absorb an abnormal amount of moisture. If the yarn is produced for sale, this is frequently the result of a desire on the part of the seller to have the yarn weigh as much as possible within reasonable limits, although the precaution must be taken not to damp it to such an extent as would cause it to lose its excess moisture during transportation or would cause mildew, discoloration, or decay. Another reason for damping yarn is to cause the strands or twist put in the thread to become fixed, so that

Digitized by Google

when the yarn is unwound it will not immediately run into snarls, as is sometimes the case with very dry yarns, especially in fine numbers or when excessively twisted in any counts.

Still another reason, if the yarn is for filling, is to enable the picks to be driven closer to one another in beating up in the loom in the case of fabrics that are very heavily picked and in which dry threads of filling would not lie sufficiently close together to enable the necessary number of picks per inch to be inserted; damping also prevents the filling from kinking.

70. This capacity for absorbing moisture, which is known as the *hygroscopic* property, is not so great in the case of cotton as in that of some other materials; cotton will, however, easily absorb 5 per cent. of moisture if removed from the hot spinning rooms of a mill and placed for sufficient time in a cool, moist atmosphere, and, under suitable conditions, can be caused to absorb still more moisture.

The hygroscopic property of woolen and worsted yarns is much greater than that of yarns spun from any other materials. If the yarn is stored in a dry atmosphere it will contain from 5 to 10 per cent. of moisture, but if stored for some time in a damp atmosphere will readily absorb from 10 to 25 per cent. additional moisture. This, of course, produces great variations in the weight of a given amount of yarn and should be an important factor in the purchase or sale of all yarns, although less attention is given to this matter in America than in England and on the continent of Europe, where conditioning houses are established for the express purpose of determining the exact percentage of moisture, not only in yarns but also in raw wools and stock in a partially manufactured condition.

Silk yarns also possess a marked hygroscopic property, but not to so great an extent as woolen and worsted yarns.

71. Conditioned yarn is either damped or steamed. A customary method of conditioning cotton yarn, especially in Europe, is to place it in a suitably constructed basement, the

Digitized by Google

floor of which is absolutely level and made water-tight with clay or concrete. On this water-tight floor porous bricks are laid in rows, with slight spaces between the rows, so as to provide continuous channels along which water may flow. The basement is then flooded to about one-half of the depth of the bricks, fresh water being admitted at one end of the room and an overflow provided at the other. The yarn is placed in baskets and allowed to stand on the bricks for several days.

Another method is to pack the yarn in a frame between moist woolen cloths, a layer of yarn being placed on a cloth and covered with another cloth, and then a second layer of yarn, and so on. In this way, by being allowed to stand overnight, it will absorb almost as much moisture as it would in a week by the first method.

It is usually filling yarn that is steamed. This is accomplished by means of a steam chest, into which is carried a steam pipe having an outlet within. The chest is so constructed that it will contain a number of boxes, which are perforated with holes to admit the steam. The yarn is placed in these boxes and when a sufficient number of the boxes have been placed in the steam chest, the door is tightly closed and steam admitted for several minutes, after which the yarn is removed.

VARIETIES OF REGULAR YARN RESULTING FROM COLORING

SINGLE YARNS

72. Yarns, either single or ply, may be modified in appearance during the spinning or twisting process by the introduction of color, so that they cannot be described as natural yarns in the sense of indicating the natural color of the yarn, nor, in the case of cotton yarns, are the words gray or brown applicable to them, in the sense in which those terms are applied to yarn and cloth made from cotton in the natural color. In single yarns, the varieties generally found

Digitized by Google

are *solids*, *mixes*, *intermittents*, *randoms*, and *mock twists*. In ply yarns, the varieties found are known as *twists*.

73. **Solids** are yarns spun from one color only of fibers that have been dyed in the raw stock or at some early process of yarn preparation; for instance, in the sliver, in the case of cotton, or in the top, in the case of worsted yarns. Another name for solids is *self-color*, or *selfs*, to indicate that they are made from one color. In dyeing the raw material in this way, it is almost impossible to have all fibers dyed exactly alike, but the later processes of yarn manufacture so blend the fibers as to eradicate any irregularity in shade. These yarns are made principally in cotton, and for filling, the object being to spin the yarn in a form ready for the shuttle of the loom, and thus avoid the reeling and back-winding processes that would be necessary if it were dyed in the skein or warp, and the quilling processes necessary if it were dyed in the long chain.

74. **Mixes** are those yarns made by blending fibers of a natural color with dyed fibers of the same material, or by blending two or more colors of dyed fibers. This is done at one of the earlier processes in the manufacture of the yarn, so that the fibers become thoroughly blended, and the effect is a delicately tinted or mottled appearance that cannot be obtained by dyeing the yarn after spinning. Innumerable combinations may be made: such as black and white; brown and white; blue, black, and white; brown and yellow. Light shades are made by using a large proportion of white or natural fibers with a slight proportion of colored, while darker shades are produced by increasing the proportion of the dyed fibers, or using fibers that have been dyed different shades. Various names are given to these yarns, such as *mixes*, or *fancy mixtures;* the English name is *mixture yarns*, and the French name *mélange*. The different shades producible are so numerous that very few of them are named, but they are generally indicated by a shade number. A few shades, however, are so commonly used that trade names have been given to them, although in this case the same

Digitized by Google

name is sometimes found to have a different meaning in different districts, while two or more names are sometimes given to the same yarn.

In cotton yarns, one class of these fancy yarns are those known as *silvers*, which are combinations of black and white in light shades, making a silver gray, and blue and white in light shades, making a silver blue. These silvers are sometimes called *steels*. Another shade in common use is what is known as *Jaeger* in America and Germany, or *natural* in England. It is a light combination of brown and white, sometimes with a few black fibers in it, in imitation of the natural shade of some varieties of sheep wool commonly found in Jaeger garments. *Heather mixes* are other popular shades composed of browns, blacks, and other dark colors combined with purple fibers, sometimes three or four colors being used to make one mix. In woolen and worsted yarns, common mixes are known as *gray* mixes, which are combinations of black and white in various proportions, and *Oxfords*, which are dark grays made with a very small percentage of white, and so on.

Mixes are made in cotton, wool, worsted, mohair, schappe silk, and other materials, and are used principally for woven dress goods and for knitted fabrics, especially underwear. The information given as to the forms in which yarns are put up applies to the various mixture yarns.

75. Random yarns are those that have been skeined and one-half of the skein dyed by dipping it half way into dye liquor and after drying it dyeing the other half another color; or one-third of the skein may be dyed one color, another third of the skein a second color, and the remainder of the skein left a natural color. Many other random effects may be produced in a similar manner.

76. Intermittent yarns are those composed of two or more colors of fibers, usually of white yarn with a slight percentage of colored fiber, this fiber being placed in the yarn in streaks. Where the streaky color occurs, the yarn is very slightly thicker than the other portion of the thread;

Digitized by Google

but as it has been drawn out after the insertion of the colored streaks, this variation in size has been reduced so as to be hardly discernible. The streaks of color give a distinct mottled effect in the yarn, and also in the cloth or knit goods made therefrom.

The name intermittent yarn is commonly applied to these yarns in Europe, but in America they are sometimes called random yarns. Strictly speaking, they are not random yarns, for the true random yarn is one that is produced on an ordinary single or ply thread by an irregularity in dyeing. Intermittent yarns are found in cotton, woolen, worsted, or mohair. They are sometimes used as filling for weaving, but more frequently for knit goods, especially underwear.

77. Mock-Twist Yarns.—An imitation twist may be made at the spinning machine by putting up two ends of different colored roving and spinning them into one thread. Thus, for example, if a black end and a white end are run together, it will make a black-and-white mock twist. The English name for mock twist is *mock grandrelle.*

PLY YARNS

78. Twists.—In American textile manufacturing the word **twist** applies to a ply yarn composed of two or more differently colored yarns. For example, a single black yarn twisted with a single white yarn will make a black-and-white twist in 2-ply. A brown thread, black thread, and yellow thread will make a brown-black-and-yellow twist in 3-ply. In cases where a subdued tone is desired in a fabric or where a mottled effect is necessary, it is customary to use a twist yarn. For example, by twisting a brilliant color with a dark one, a softer color is produced than by using a solid thread of one bright color. Twists are made in cotton, woolen, worsted, mohair, silk, and other yarns, and sometimes each of the constituent threads of the twist is of a different material. The name *double-and-twist* is often applied to 2-ply twists made in woolen or worsted.

Digitized by Google

79. It will be noticed that in the manufacture of these solids, mixes, and twists the construction of the yarn itself is just the same as in the case of an ordinary yarn, the different appearance being obtained not by a change in the structure but by the introduction of color.

NOVELTY YARNS

80. A class of yarn that is made in very great variety but in relatively small quantity, even in the aggregate, as compared with ordinary yarns, is that classification known as *novelty yarns* or *fancy yarns*, the latter being the name usually given to them in England. These yarns are made in cotton, wool, worsted, mohair, and silk, but seldom, if ever, in other materials. In some cases, a certain variety of these yarns will be found in all of these materials; others, owing to their construction, can be made in only one or two of the materials that are suitable for use, while many are a combination of two or more fibrous substances.

A **novelty yarn** may be defined as one that differs in construction from an ordinary single or ply yarn. Novelty yarns do not include those that differ in appearance merely on account of their having been passed through a bleaching, dyeing, printing, scouring, mercerizing, polishing, or similar process, for such processes do not change the structure of the thread; yet dyed, bleached, mercerized, or printed yarns are often used as one or more of the constituent threads of a novelty yarn, although this is not sufficient to produce the novelty yarn. There must be some difference in the structure of the resultant thread from the regular type of single or ply yarn common in the material from which the novelty yarn is made. Thus it will be seen that a number of effects in single and ply yarns cannot be considered as novelty yarns, even though the appearance of a thread bears a marked difference from the ordinary yarn; for instance, a mock twist is a single yarn and has the appearance of two spirals forming a thread, and a cotton or woolen mix has a distinct mélange appearance, although the construction of the

Digitized by Google

thread is that of the ordinary type; a twist made of two colored threads twisted together is still an ordinary type of ply yarn so far as its construction is concerned, so that neither ordinary solids, mixes, nor twist yarns can be considered as novelties.

81. The production of novelty yarns varies at different times, depending on current styles or fashions in goods. A certain type of yarn may be in vogue for one or two seasons and then not be much used for several years, another taking its place. Such yarns are principally used for woven goods, and occasionally for knit goods, to produce novel or extraordinary effects. When used for cloth they may form the body of the fabric or may be incorporated only in a very small proportion; for example, when one thread is inserted at intervals throughout the fabric. Novelty yarns are generally made in coarse numbers, owing to the fact that their construction, in most cases, prevents the formation of a fine yarn; for this reason, and also because the threads are in many cases uneven and often composed of two or more materials, the ordinary methods of indicating the counts of yarns are often discarded, and instead the size is indicated by the number of yards in a pound or other given weight.

As there is no uniformity in the naming of novelty yarns, it is not possible to give for each kind one name that is generally applied to it in all branches of the textile trade in America and Europe. Most novelty yarns are of domestic manufacture, although formerly imported, which again leads to confusion in naming them. For this and other reasons, most manufacturers of and dealers in novelty yarns sell them by number instead of by name. It is not intended to describe the manufacture of novelty yarns, as that is outside the scope of this Section; also, owing to the fact that they are made by only a few firms, and often by secret or patented processes, there is very little information available on the subject. It is intended, however, to describe the appearance of the yarns sufficiently for their identification so that the differences between them may be understood.

Digitized by Google

Novelty yarns may be divided into *single novelty yarns* and *ply novelty yarns*. Among the single novelty yarns are *flake yarns*, *knickerbocker yarns*, *mock knickerbocker twists*, and *crêpe*, or *extra-hard, yarns*.

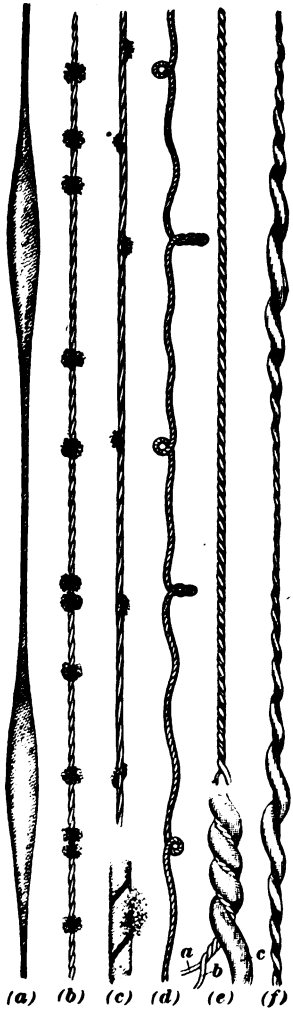

FIG. 13

SINGLE NOVELTY YARNS

82. Single flake yarns, as shown in Fig. 13 (*a*), are uniformly uneven single yarns, in which thick and thin places alternate regularly, the larger portions gradually tapering off to a thin thread, which enlarges again to a thick place. As the twist, given the yarn during the spinning process, has a tendency to affect the thinner places of the yarn more than the thicker ones, a great many more turns to the inch are found in the thin portion of a single flake yarn than in the thick portion.

Single flake yarns can only be made from fibers that are relatively short, of even length, and lend themselves to being drawn with accuracy; thus, the most common flake yarns are those made of cotton or wool, or sometimes a combination of wool and silk. In the true single flake yarn the flakes are evenly spaced throughout the length of the thread; the fibers are parallel to one another, lying in the direction of the length of the thread; and all fibers form a constituent part of the thread.

Digitized by Google

83. Knickerbocker yarns, or more briefly **knicker yarns,** Fig. 13 (*b*), are single yarns with which are intertwined relatively bulky pieces of the same material that, however, are not so large as to unduly weaken the yarn or prevent its being used for weaving purposes. These extra pieces are spoken of variously as *neps*, *motes*, *specks*, *nubs*, or *knickers*, and the yarn itself is sometimes called *speck yarn*, or *nub yarn*. The English name is *knicker yarn*. Sometimes this yarn is called flake yarn, but it is not a true flake thread, as the excrescences are not evenly spaced and are additions to the ground thread. They can be picked off from the thread and still leave a single yarn. They differ from true flake yarns also in the fact that the knickers are composed of balls of fibers crossed in all directions. Knickerbocker yarns may be made of materials in their natural state, that is, the yarn undyed and the ground thread and the knicker composed of the same material. They are sometimes made with the knicker of one color and the ground thread of another; sometimes they are bleached, dyed, or printed after being spun, so that a large number of styles are produced. The best grades are those that are so constructed as to show knickers at close intervals on as fine a ground thread as possible; these are the grades that more frequently are called nub yarns.

84. Knickerbocker mock twists are shown in Fig. 13 (*c*), the lower part showing a short piece of yarn enlarged. This yarn has the appearance of a twist yarn with the knicker effect showing on one portion of the twist. Each constituent part forms a spiral, with the nubs projecting from one of the spirals at more remote intervals than in the case of ordinary knickers. Knicker mock twists are always made in at least two colors, each spiral being a different color. Another variety of these yarns has knickers on both the spirals, thus giving an opportunity for the use of four colors if desired, that is, one spiral of a certain color carries knickers of another color, while the other spiral is of a third color with the knickers of a fourth color; yet

Digitized by Google

the completed yarn is only a single yarn. Both knickerbocker yarns and knickerbocker mock twists are made in cotton, wool, and silk, or combinations of these materials.

85. Crêpe, or extra-hard, yarns, Fig. 13 (*d*), are single yarns in which an excessive amount of twist has been inserted, the yarn being allowed to contract during the twisting process; this forms numerous snarls, or kinks, thus giving to fabrics woven from it not only a rough appearance but a sharp, prickly sensation to the touch. Such yarns are chiefly made in cotton.

PLY NOVELTY YARNS

86. By using two or more threads in producing a novelty yarn there is a much wider range for the production of novel effects. An opportunity is given in ply yarns of introducing two or more threads of different colors, of different sizes, or of different materials, which in itself provides for endless combinations, more especially when one of the single yarns is not of the ordinary construction. The ordinary types of ply novelty yarns are *corkscrew yarns; bead yarns; gimp yarns; spiral yarns; ply flake yarns; 2-ply flake yarns; slub*, or *bunch, yarns; ply crêpe yarns;* and *twist corkscrew yarns.* The more complicated varieties are *knotted*, or *bourette, yarns; knotted*, or *bourette, twists; loop*, or *bouclé, yarns; diamond twists;* and *tinsel yarns*, as well as combinations of any two or more novelty yarns, or of novelty yarns with ordinary single or ply yarns, the combination being made by twisting them together.

87. Corkscrew Yarns.—The simplest way of making a **corkscrew yarn** is to double a thick and a thin single yarn together, each of the single yarns being twisted in the same direction, and the ply yarn, of course, twisted in the opposite direction. The tendency is for one yarn to be wound around the other yarn in such a way as to produce the corkscrew appearance that gives the name to the yarn. These yarns are made in cotton, worsted, mohair, or almost any material.

Digitized by Google

88. Bead Yarns.—A more pronounced corkscrew yarn, sometimes called the **bead yarn,** Fig. 13 (*e*), is produced by twisting together a fine 2-ply yarn and a coarse single yarn, usually of the same material. The lower part of (*e*) shows a portion of the yarn enlarged to show its construction more clearly. The two single yarns of the 2-ply yarn and the single coarse yarn are, originally, twisted in one direction, say to the right. The 2-ply yarn is twisted in the opposite direction, say to the left. Thus, the two threads that form the bead yarn are twisted in opposite directions. When these two are twisted together, the ply yarn becomes harder twisted and shortens, while the single yarn has the twist taken out of it and lengthens, thus becoming more open and oozy and giving a more pronounced corkscrew effect, sometimes spoken of as a *bead effect*, or *waved effect*. By a suitable number of twists per inch in the ordinary yarns and in the bead yarns, many different effects can be produced; the final twisting is sometimes carried to such an extent as to actually untwist the single yarn and commence twisting it again in the opposite direction to that of the original twist. This method of producing novelty yarns can be applied to either cotton, worsted, mohair, silk, or combinations of these, and lends itself to the application of color by the selection of different-colored threads.

These bead yarns should not be confused with yarns on which glass beads are threaded or imitation beads placed.

89. Spiral yarns are constructed in the same way as bead yarns, but consist of built-up threads made from several ends of ply yarns, being finally twisted from one fine end and one coarse end. One style of spiral yarn consists of two ends of coarse 2-ply and one end of thick single yarn twisted together; this makes a heavy ply thread, which is then twisted with a thin end of 2-ply yarn, thus producing a heavy, strong, spiral thread. By the use of color, considerable ornament can be applied to these threads. They are made in cotton, worsted, mohair, or combinations of these materials.

Digitized by Google

Bead and spiral yarns are made in many other combinations of single yarns and ply threads, or combinations of ply threads.

90. Gimp yarns is a name given to bead and spiral yarns.

91. Ply Flake Yarns.—Several varieties of ply flake yarn are made, either by combining: (1) a single flake yarn and an ordinary single, (2) a single flake yarn and an ordinary ply yarn, (3) two single flake yarns, or (4) a ply flake yarn and an ordinary 2-ply yarn. A combination of a single flake yarn and an ordinary ply yarn is shown in Fig. 13 (*f*). The thin thread is a common 2-ply yarn of regular construction throughout its length and is twisted in the opposite direction to the single flake yarn. When the two are twisted together, the ply yarn becomes harder and shorter, while the flake yarn becomes softer and longer, thus giving a pronounced bead effect near the flake. The ply flake yarn made from two single flake yarns is somewhat similar in appearance, but has not the strength of the ply flake yarn made from one single flake and the 2-ply thread. By making a flake yarn in this manner the flake is softer and more pronounced, as compared with the single flake yarn, while the ground thread gives the necessary strength to enable it to be woven. Flake yarns are more commonly made ply than single, and the customary interpretation of the term flake yarn is that of a ply flake yarn.

Ply flake yarns can be made in cotton, wool, silk, and other materials or any combinations of these materials, and of course lend themselves to the use of color in many ways.

92. Two-Ply Flakes.—Two ply flake yarns can be twisted together so that the thick part of one of the flake yarns comes against the thick part of the other flake yarn, thus making a thread with the flake part accentuated and composed of two distinct colors when each of the single flake yarns is of a different color. Such a yarn is shown in Fig. 14 (*a*). The name *cloud yarn* is applied to these various types of ply flake yarns.

Digitized by Google

93. Bunch Yarns.—Very effective novelty yarns can be made by inserting at regular intervals in the ground threads of ply yarn of one color, *slubs* of the same material but

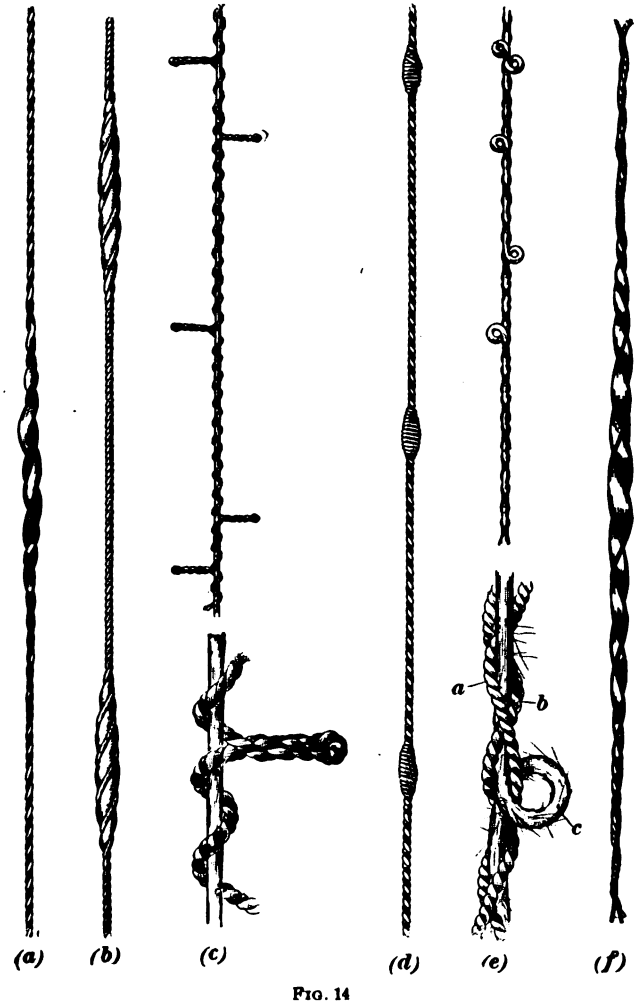

FIG. 14

of another color; slubs are small bunches of untwisted or loosely twisted yarn, as shown in Fig. 14 (*b*), which

Digitized by Google

represents a small piece of **bunch**, or **slub, yarn.** This bears some resemblance to a flake yarn, but when closely examined it will be seen that each slub is absolutely separated from the next slub, being connected by the ply yarn only. More effective forms of slub yarns are produced by using two different colors alternating with each other, for instance, first a red slub, then a black one, next a red one, etc.; or each slub may be of two colors.

Bunch yarns are made with a cotton ground thread and cotton slubs, cotton ground thread and woolen slubs, worsted or mohair ground thread and woolen or silk slubs, and with other materials, while color is very largely introduced in their manufacture. In some branches of the trade and in various districts, bunch yarns are called *slub yarns* or *flake yarns*, while the name *cloud yarns* is also applied to them.

94. Ply crêpe yarns, Fig. 14 (*c*), are produced in various ways: (1) by doubling an ordinary single yarn with a single crêpe, or hard-twist yarn; (2) by doubling a ply yarn with a single crêpe yarn; or (3) by first making an extra-hard ply crêpe yarn and doubling this with an ordinary 2-ply yarn. All of these may be of the same or different colors.

95. Twist Corkscrew Yarns.—An effective corkscrew yarn is made by using either a mock twist or a real twist for the thick thread of the corkscrew and a one-color thread for the thin one.

96. Knotted, or **bourette, yarns,** Fig. 14 (*d*), comprise one of the most common types of novelty ply yarns and are produced by, and exhibit the effect of, one thread wound around a ground thread a large number of times until a pronounced knot, or button, of thread is formed; then for a certain distance the ordinary construction of a ply-yarn twist is maintained until the next button is reached. These yarns are generally called *knotted*, or *knop*, yarns, although the names *nub yarns* and *bug yarns* are sometimes given to them in America, while when made from worsted and silk or mohair and silk, they are generally called *bourette yarns.* The ground thread is a ply yarn of one color, the knotting

Digitized by Google

thread usually a single yarn of another color, and the ground thread and knotting thread are twisted in opposite directions.

Knotted yarns can be made with the knops, knots, or nubs either closely or widely spaced, but the spacing is even throughout the length of the thread. The knots can be made in two colors, both differing from the color of the ground thread and the knots alternating in color; thus, a red and a white knot can be made to alternate on a black ground, in which case the ply yarn between the knots would be a red-white-and-black twist.

Knotted yarns are sometimes confused with knickerbocker yarns, but there is a considerable difference between them; knickerbocker yarns are always single yarns and knop yarns are always ply yarns. The term *nub yarn* is sometimes applied to a single yarn resembling a knickerbocker yarn but made more carefully and of better quality, so as to imitate a knotted yarn to some extent.

97. Knotted, or Bourette, Twists.—After a knotted yarn has been made, it is quite common to twist it with a yarn similar to the color of the ground thread in the knotted yarn, so as to make what is known as a **knotted twist,** or a **bourette twist.** This strengthens the thread and aids in passing the knot through the harness and reed of the loom in weaving. The word bourette in this connection should not be confused with bourette silk yarn, which is a different variety.

98. Loop yarns, sometimes called **curl yarns** or, when made in mohair or worsted, **bouclé yarns,** consist usually of three threads—two ground threads, which are the shortest, corresponding almost to the length of the completed yarn, and one loop thread, which forms a complete curl at intervals, the ground threads binding the loops. A loop yarn is shown in Fig. 14 (*e*), the ground threads being marked *a* and *b* and the loop thread *c*. The extra length of loop thread forming complete curls, or loops, on the surface of the yarn, makes it one of the most striking varieties of novelty yarns, especially when made of suitable combinations of color.

Digitized by Google

Loop yarns may be made: (1) with all three threads of one color, (2) with binding threads of one color and the loop of another color, and (3) with each thread of a different color. Loop yarns are most commonly made in mohair and worsted, and to some extent in cotton, but a cotton fiber does not lend itself to the formation of so distinct a loop as does mohair or worsted.

99. Diamond twists are made by using binding threads laid in opposite directions around a ground thread. A diamond twist on a flake ground is shown in Fig. 14 (*f*).

100. Tinsel yarns, sometimes spoken of as **brilliant yarns,** are combinations of an ordinary yarn and flattened metallic wire; the metals used for producing the extremely thin ribbon of metal are gold, silver, copper plated with gold, or copper plated with silver. Tinsel yarns are commonly made of a 2-ply worsted or silk ground thread, around which the tinsel or metallic wire is either closely or loosely twisted. Two of these threads are commonly doubled together. **Tinsel cords** are made on the corkscrew-yarn principle, using a metallic thread as the fine end.

101. Combinations of Novelty Yarns.—The combinations of novelty yarns are usually found in the form of twists, some of the varieties being as follows: (1) knotted twists, in which a knotted yarn is twisted with either an ordinary single or a ply yarn; (2) knot-and-loop twists, in which a knotted yarn is twisted with a loop yarn; and (3) knot-and-twist yarns, in which a knotted yarn is twisted with a common twist. Other combinations are produced by making a loop yarn in which the binding thread is a knickerbocker yarn, or in which the ground thread is a knot yarn. Many other combinations are also used.

102. When it is taken into consideration that any one of the varieties of novelty yarns made may be varied in size, that most of them may be varied in color or combinations of colors by the use of an unlimited number of shades, that in the case of those exhibiting a structure of thread that varies

Digitized by Google

at intervals, the distance between these variations may be changed or the size of the thickened part may be extended in length or in thickness, that combinations may be made of two or more types of novelty yarns or of a plain yarn and a novelty yarn, and that in case of the simpler types they may be printed, dyed, or bleached after being spun, it will be realized that the possibility of producing novelties in yarns is unlimited.

It is said that 15,000 different designs, or styles, of novelty yarn have been made, any one of which is liable to come into use again at any time, according to the prevailing fashions in fabrics. These many different designs result chiefly from difference in coloring and combination of materials, since the number of distinct types of novelty yarns is comparatively small. Novelty yarns as a rule are made of relatively heavy weight—as low as 100 yards to the pound and from this upwards to as high as 3,000 or 4,000 yards to the pound. It is possible, however, to make certain types of novelty yarns in much finer numbers—up to as fine as 15,000 yards to the pound. Many kinds of novelty yarns are used in extremely small quantities, only one thread appearing at intervals in the fabric in some cases. This causes the trade in novelty yarns to be of a retail character, since a few pounds of a certain style is often sufficient for the buyers' requirements.

Digitized by Google

Digitized by Google

CLOTH ROOMS

(PART 1)

CLOTH-ROOM PROCESSES AND MACHINERY

INTRODUCTION

1. After cotton cloth has been woven and taken from the loom, it is removed to what is known as the **cloth room,** where it passes through certain processes that are necessary or desirable before it is ready to be shipped from the mill to the dry-goods merchant, converting establishment, exporter, clothing factory, or wherever it is intended to be delivered, according to the use to be made of it or the customary method of distribution to the ultimate purchaser. Such shipping of the cloth may take place through the dry-goods commission merchant or through his order; or it may be done directly by the mill, according to the system of selling the goods that is adopted. A complete list of operations that occur in American cotton-mill cloth rooms is somewhat as follows:

1. *Receiving and checking* the cloth from the weave room, for the purpose of verifying the amount received of each style and checking the weave-room report of cloth produced, is required in order to make certain that all the cloth that has been woven or for which the weavers are paid is received in the cloth room, also in order to keep the management informed as to the amount of cloth being received of each style, so

For notice of copyright, see page immediately following the title page

Digitized by Google

that progress on various orders can be ascertained and arrangements made for shipping.

2. *Inspecting* is for the purpose of examining the cloth received from the weaver, with a view to detecting faults in the fabric and taking suitable action thereon to prevent a repetition of them, and also for the purpose of sorting out the pieces of cloth into first grade, second grade, and in some cases third grade.

3. *Sewing* is the stitching together of the ends of each two consecutive pieces of cloth that are intended to form a continuous length, in order to facilitate some succeeding treatment and to conduct it with the greatest economy.

4. *Rolling* is the process of winding, in a large roll, the continuous sheet of cloth that has been produced by sewing the ends of separate pieces together.

5. *Brushing* is the process of treating the cloth, on one or both sides, with revolving brushes (usually bristle brushes, but sometimes wire brushes followed by bristle brushes), for the purpose of removing loose threads, loose fibers, dust, pieces of leaf, stalk, or other foreign matter, and also imparting a smooth clean surface to the fabric and laying the projecting fibers in one direction.

6. *Scraping and beating* is performed on coarse and heavy fabrics for the purpose of rubbing and striking from the cloth small projecting particles of a fibrous nature (such as knots, lumps, and nubs) that are produced in the processes of manufacture, or those of a foreign nature (such as motes, leaf, and stalk) that come with the raw cotton; these are difficult to remove by means of a mere brushing action.

7. *Shearing* is the operation of cutting from the face, or sometimes from both the face and the back of the fabric, projecting threads and fibers, the presence of which is undesirable in most fabrics.

8. *Calendering* is a compressing and smoothing action produced by passing the fabric between heavy hot or cold rolls to impart a smooth surface to the cloth.

9. *Folding* is the process of arranging the cloth in superimposed layers, each of the same length, so as to provide a

Digitized by Google

suitable form in which the fabric may be baled for shipment and offered for sale in dry-goods stores, as well as to give a ready means of ascertaining the length in each piece from the number of folds obtained.

10. *Stamping* is the operation of impressing on the outside of a folded piece of cloth such marks as may be required or desired, as for example, the name of the mill, the name of the fabric, the number of yards in the piece, and (especially for export) the trade mark of the manufacturer.

11. *Ticketing* is the operation of attaching to the folded piece of cloth some printed ticket, frequently highly colored or strikingly designed, which may contain the name of the mill, the name of the fabric, the trade mark, the length or width of the goods, and such other features of a like nature as are desirable. Sometimes this is done by means of paper bands passed around the piece of folded cloth and pasted in position; this may be adopted instead of, or in addition to, stamping and ticketing.

12. *Baling* is the packing of a number of pieces of cloth within a covering of burlap, or other material, suitably secured by ropes or iron or steel bands, to prevent the cloth becoming soiled or damaged in transit, and to facilitate transportation by reducing the bulk.

2. In this list only those processess that are usually found in the cloth rooms of American mills are defined. No mention is made of such processes as singeing, bleaching, tinting, starching, tentering, mordanting, dyeing, printing, filling, mercerizing, or associated processes that are necessary in the case of some fabrics to prepare them for the market. Though in a few cases one or more of these processes are conducted in the same establishment as that in which the goods are woven, yet this is the exception rather than the rule, and consequently all such processes are ignored here, since they more properly belong to the operation of a converting, or as it is sometimes called a finishing, establishment.

The expression *finishing* is sometimes applied to the processes that peculiarly belong to the cloth room of a mill, but

Digitized by Google

it should not be used in this connection, since it is misleading, although there is a precedent for such a use of the term in connection with other industries, as for example in the knitting-goods industry, where finishing means the making up of the knitted fabrics in suitable form for the market, and in the woolen-and-worsted-cloth industry, where the finishing department includes some processes corresponding to those performed in a cotton-cloth room, together with such additional processes as are necessary to prepare the fabric for the market. However, in the cotton trade, it is becoming more and more common for all purely converting processes, which change the appearance of the fabric, to be conducted in a separate establishment, known separately as a bleachery, dye works, print works, or collectively as converting, or finishing, works.

The cloth-room processes listed here have as their object merely the changing of the form of the fabric from that in which it leaves the loom to a suitable one for shipment, and a slight or superficial cleaning of the cloth to make it presentable to the buyer, together with the necessary inspection and baling.

It is in comparatively few cloth rooms that all the processes listed are conducted, since but very few of them are absolutely necessary. The adoption of some or all of the processes depends on: (1) the fabrics that are to be treated; (2) the differences of opinion among millmen as to what is a suitable treatment even for the same fabric, and (3) the policy of the management either in the direction of avoiding all unnecessary processes, for the sake of economy, or of incurring additional expense in the equipment of the mill and in the operation of the cloth room, for the sake of producing the best quality.

3. The equipment and the operation of the cloth room cannot receive too much attention; in too many mills it is given but little consideration. In the designing or the equipment of the mill, very frequently any available space is utilized for the cloth room, while after the mill is in operation,

Digitized by Google

so long as the goods are inspected and baled, and the room is operated at a minimum expense, it receives no further attention. As a matter of fact, the proper equipment and operation of the cloth room is of vital importance to the successful running of the mill. The construction and location of the cloth room should be of the best, its equipment the most suitable for the fabrics being manufactured, and the arrangement of the machinery such as will enable the cloth to be treated with the least amount of handling and the greatest economy. The machines used should be so selected, set, and operated as to effect an improvement in the cloth between its leaving the loom and being packed into bales, that will far more than compensate for the comparatively small expense per yard involved. This will increase the reputation of the mill for producing well-made, well-classified, and well-finished fabrics, and will result ultimately in increased prices or preference when orders are being placed. Careful and constant attention to this department cannot fail to result in creating in the mind of the wholesale or retail buyer, the commission agent or the converter, those favorable first impressions of the goods that are so desirable, and in preventing the unfavorable impressions that must be produced by badly finished, badly inspected fabrics, made up untidily or irregularly, either in the piece or the bale.

4. In case a mill is sufficiently large to justify the expense, a cloth room should be located independently of the main building, preferably immediately between the weave room and the storehouse for baled goods and on the same level as these. It should be connected both with the weave room and with the storehouse by passages and should be of fireproof construction.

Where the weave room, the cloth room, and the passage between are all on one level, or approximately so, the cloth may be conveyed directly from the former room to the latter by means of trucks running on rails. When the weave room is situated above the cloth room, the cloth may be dropped into the cloth room by means of inclined chutes, while in

Digitized by Google

case the cloth room is at a higher elevation than the weave room, some mills adopt an endless belt, usually of rubber, that travels at a slow speed and has lags attached at short intervals, to carry the cuts of cloth up to the cloth room. In the case of the storehouse, it is important that the floor should be of such a height above the ground as to afford facilities for loading the bales of goods into railroad cars or on to trucks without raising them, and for this reason it is not always advisable to have the storeroom floor on the same level as the cloth room; but there should not be sufficient difference in the heights of the floors to prevent the bales being trucked from the cloth room to the storeroom on an incline.

One of the most important functions of a cloth room is the inspection of all the cloth manufactured by the mill, so as to ascertain imperfections that necessitate the classification of any pieces as *seconds*. In order that the persons inspecting the cloth may perform their work to the best advantage, the light should be of the best and should come from the best possible direction. It is desirable that this light should come from the roof; a good type is a saw-tooth roof taking the light from the north side, or if this is impracticable, a monitor roof is desirable. In case it is impossible to have either, the cloth room should be so located as to enable the light to be taken from the north side, where the inspection tables should be placed. The artificial light supplied should also be ample and suitable for use when daylight is not available.

The cloth room should be suitably constructed to reduce the risk of fire to a minimum, should be provided with fire-prevention apparatus, be well ventilated, and suitably heated. As many of the machines required are of heavy construction and others have intermittent motions that produce considerable vibration, the floor of the room should be of heavy construction. There should also be below it a well ventilated space, such as a low story or a basement, to provide against dampness in the floor. If this is impossible, the cloth room should be provided with a sufficient number

Digitized by Google

of slatted platforms on which cloth can be stored above the level of the floor. These platforms are divided by vertical slatted partitions into bins for the storage of different styles of cloth, after they have been folded and examined, until a sufficient number of cuts is collected to form a bale.

The arrangement of the machinery in the cloth room should be such as to reduce to a minimum the distances between the points where the cloth must be handled, always bearing in mind the necessity for adequate light at those tables or machines where inspection takes place.

Cloth rooms should be kept as clean as possible. If the condition of the room, as regards cleanliness, is not carefully considered and if dust and dirt are allowed to collect, it is evident that the objects of a large part of the work will be defeated by a simple matter that could be easily remedied by a little extra care and attention to details. For the purpose of keeping the cloth free from dust and dirt, the dust should be removed from the machines by means of a system of ducts and strong blowers or fans connected to the different machines.

CLOTH CHECKING

5. During the process of weaving, the cloth is wound around a roll on the loom until a certain length has been obtained, when it is severed from selvage to selvage and the roll on which it is wound taken out, leaving the cloth in a compactly rolled condition, in which form it is taken to the cloth room. What is known as a **cut** of cotton cloth is that length into which the cloth is finally cut and delivered to the dry-goods store or other ultimate purchaser. The length of a cut is usually about 50 yards, and the completion of each cut is indicated by means of a cut mark placed on the warp. Although the cloth is sometimes removed from the loom when a cut has been completed, it is more common to continue weaving until two cuts have been made; this is known as a *double cut*. In some cases, three, four, or more cuts are woven before the cloth is removed from the loom. The rolls of cloth are usually collected by an operative

Digitized by Google

detailed for that purpose, piled on a truck, and taken to the cloth room.

Cuts are also often spoken of as *pieces;* for example, it is occasionally found that the daily report of the weave room refers to so many pieces having been delivered to the cloth room. While the use of the word piece in this connection is to some extent justified by custom, it will not be used in this sense here; a piece will be considered as any continuous length of fabric without a seam, and the word *cut* will be used where the length of cloth between the cut marks is meant. The word *bolt* is also sometimes used to indicate a cut of cloth; for example, a bolt of gingham. The term *style* is used to describe a certain kind of cloth as determined by the weave, the weight per yard, the yarns, or any distinctive features in construction.

6. Different mills adopt different times for sending the cloth from the weave room to the cloth room, since this of course depends to a great extent on the size of the mill and the number of looms in operation; but it is always best to have a definite time set for this work, as by this means the operators in both rooms who have this in charge can arrange their other work to the best advantage. In the weave room, a record is kept of the number of cuts woven during each day, and if the room is running on more than one style of goods, the different styles are also designated, together with the number of pieces of each style woven. A duplicate of this report is sent to the cloth room, and the first duty of the overseer or second hand of this room when handling any newly arrived lot of cloth is to see that the weave-room report is carefully checked by means of the cloth received. This assures the discovery of any error that may have been made when booking the cloth in the weave room, and also makes it reasonably certain that no piece has been lost while the cloth has been passing from one room to the other. In some mills, it is customary for the list to be sent from the weave room in duplicate and one copy returned to the boss weaver by the overseer of the cloth room, either marked

Digitized by Google

correct or with any discrepancy between the amount called for by the list and that received in the cloth room indicated. This gives the boss weaver an opportunity of having the error rectified immediately. As different styles of goods are handled differently in the cloth room, and as a favorable opportunity is given, when checking the cloth received, for placing all the pieces that are to be handled alike in a pile by themselves, this should be done then, after which they can readily be taken to the different machines through which they are to pass. It is important that these piles of cloth from the weave room should not be allowed to accumulate, but should be opened, handled, and examined within a reasonable time after they arrive in the cloth room, for they may contain faults that should be discovered and reported to the boss weaver as soon as possible, especially in cases where the faults are those caused by defects in the loom, which should be remedied promptly to prevent the weaving of more cloth that will contain the same fault.

SEWING AND ROLLING

SEWING-AND-ROLLING MACHINES

7. It is more convenient and economical at some of the machines used in a cloth room to handle the cloth in a long continuous sheet, rather than in separate pieces. In some of these machines the cloth follows a path over and under certain brushes, rolls, shears, etc., through which it is difficult to thread the piece of cloth, and if this threading had to take place each time that a cut was run through, much time would be wasted and the production of the machine greatly reduced. Even in machines where the threading of the new piece through the machine would not occupy much time, the frequent stoppages at the ends of the cuts would reduce the production and increase the labor cost. If cuts of cloth 50 yards in length were passed through any of these machines one at a time, the greater part of the attendant's time would be devoted to stopping the machine after one

Digitized by Google

cut had run through and getting it ready to run another one. It is to avoid this loss of time that it has become customary to stitch the ends of consecutive pieces together and wind a number of them into one large roll, since by this means a much larger number of yards can be run at one time, without having to stop in order to start a new piece. As many of the later machines employed in a cloth room have a capacity of between 25,000 and 35,000 yards of cloth per day, if operated continuously, and as these machines are somewhat expensive to install, it is desirable to have as great a length as possible pass through each machine per day. It is also desirable to avoid any imperfect method of connecting the ends of cloth at the machine in question, which might result in damage to the machine or cloth or both. The sewing machine, therefore, has been introduced, and is widely used in cloth rooms for the purpose of neatly connecting the ends of pieces of cloth by means of a straight row of stitches extending from one side to the other, usually of the style known as a *continuous chain stitch*, and so arranged that the thread may be easily removed after it has served its purpose.

As the ends of the pieces are sewed together, some means must be provided for disposing of the cuts after they are attached to one another; this is generally done by winding them on a roll until a continuous length of as much as 1,000 yards or even more is obtained. The roll is then removed to the next machine through which the cloth is to pass, or in some cases is shipped in the roll to the bleachery or other converting establishment.

8. The two processes of sewing and rolling are generally performed in one machine, which is therefore called a **sewing-and-rolling machine.** Sometimes it is called the *opening-winding-and-sewing machine*, from the fact of its opening the small rolls of cloth that are taken from the loom and rewinding them into larger rolls, as well as sewing the ends together. The construction of the machine is such that after a piece of cloth is wound on the roll, the winding

Digitized by Google

arrangement is stopped until the end of a second piece is sewed to the end of the first piece, after which the sewing mechanism is stopped and the winding arrangement started

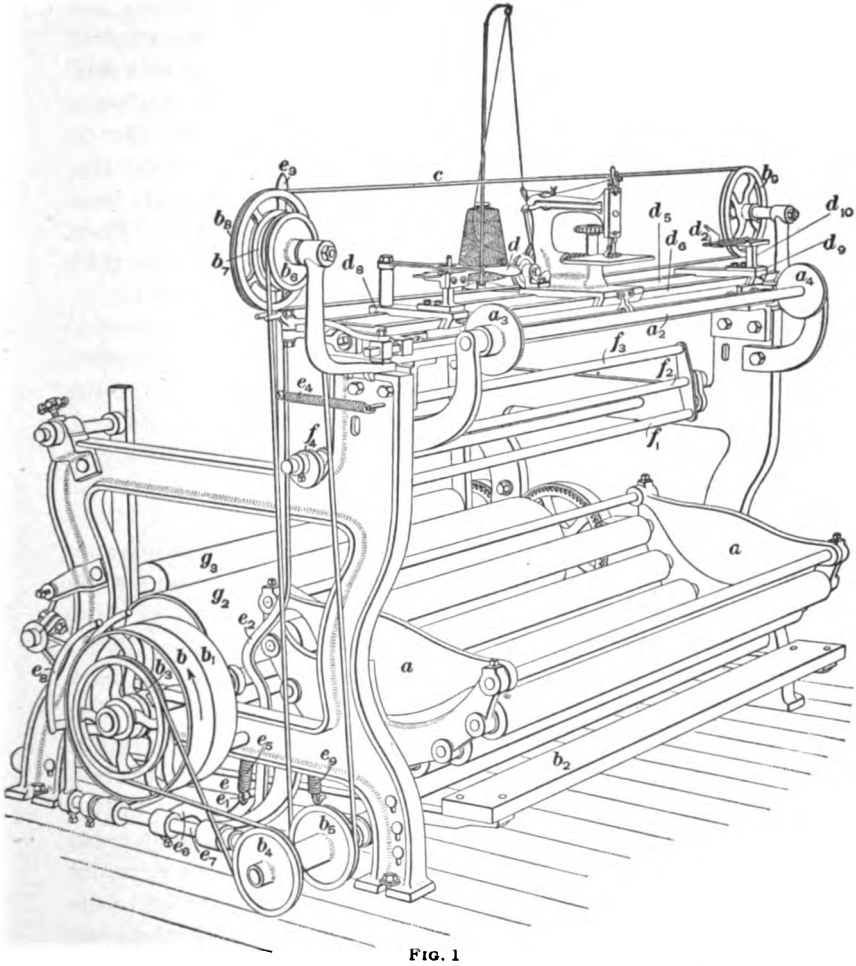

FIG. 1

and continued in action until the second piece is wound on the roll; winding is then discontinued and stitching repeated so as to attach a third piece of cloth to the end of the second, and so on. From the fact that the cloth is held stationary

Digitized by Google

during stitching, the ends being attached to and distended between steel pins, while the sewing machine travels along a track and inserts the thread that forms the chain stitch, this style of sewing machine is spoken of as the *railway sewing machine*. The seam should occur as near the edge of the piece of cloth as is possible, in order to reduce to a minimum the amount of waste cloth and the extra thickness where the joining occurs; this is desirable so as to offer as little obstruction as possible in passing through succeeding machines. The seam should not be so near the edge, however, that there will be danger of the cloth raveling. From 1 to 2 inches is usually left between the edge of the cloth and the seam, although this distance may be increased.

The sewing-and-rolling machine is almost always used in a cotton cloth room where the cloth has to be brushed, sheared, or calendered afterwards. The cloth passes to the sewing-and-rolling machine immediately after being checked, while still in the roll in which it left the loom, consisting of one, two, or more cuts, all in one piece.

9. Rolling Mechanism.—A view of a sewing-and-rolling machine is shown in Fig. 1, while a cross-section through the machine is shown in Fig. 2. The cuts of cloth are placed, one at a time, in the cradle a at the front of the machine and the end passed through until it reaches the back of the machine, where it is wound on a wooden roll g_3. The bottom of the cradle consists of wooden rolls, which revolve easily and facilitate the unrolling of the cloth. A cut of cloth is shown at a_1, Fig. 2, and the path that it follows indicated by the full lines. From the cradle, the cloth passes upwards and over the rod a_2, thence over f_1, under f_2, over f_3, under the cylinder g_2, and thence to the roll g_3. In addition to the cylinder g_2, another cylinder g_4 is in contact with the cloth that is being wound on the roll g_3. Both these cylinders are covered with sandpaper so as to provide them with a rough surface and enable them to grip the cloth sufficiently to draw it from the cradle a through the machine. The rods a_2, f_1, f_2, f_3 not only guide the cloth, but assist in straightening it

Digitized by Google

out and producing a certain amount of drag to keep it tightly stretched.

The rods f_1, f_2, f_3 also form part of an automatic stop-motion to stop the machine when each piece of cloth has been run through and a new stitching operation is necessary. The cam f_4, Fig. 1, is on the end of shaft f_2, on which the

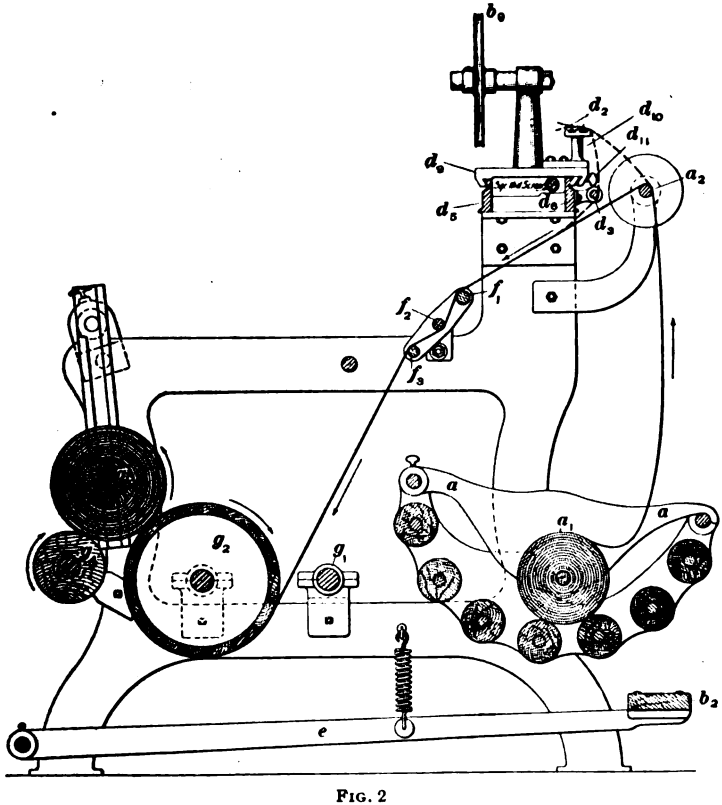

FIG. 2

tension bars f_1, f_3 are held by arms. This shaft rotates freely in its bearings. The tension rods are weighted on one side so that f_1 is heavier than f_3. Their natural position, which is assumed when there is no tension on the cloth passing through the machine and the last end of the piece is slack, is shown in Fig. 1, where f_1 is at the bottom. The position of

Digitized by Google

the rods when the cloth is passing through the machine and is subject to tension is shown in Fig. 2, where f_1 has been moved upwards to the right and f_2 depressed to the left. This position is maintained until the *tail-end* of the piece approaches and the tension on the cloth slackens, which allows the rod f_1 to return, thus throwing the cam f_4 on the shaft f_2 against the stop-lever e_2 and, as the latter is moved by the cam, shipping the driving belt from the tight pulley b_1 to the loose pulley b. At the same time a brake is applied to a brake pulley, on the shaft g_1, Fig. 2, and the winding mechanism is stopped. The brake and brake pulley are not shown in the views given, but are situated behind the pulley b_1, Fig. 1. In practice, this device is frequently disconnected, since the operator is generally in constant attendance on the machine and stops the rolling mechanism by means of the stop-lever or the foot-lever b_2 at the bottom.

During the time that the cloth is being wound on the roll g_3 at the back of the machine, the cylinders g_2, g_4 receive their motion from a gear on the end of the shaft that carries the tight and loose pulleys b_1, b, Fig. 1, the belt being on the tight pulley during this operation. The belt is shifted from the loose pulley b to the tight pulley b_1 by the shipper fork e_6, which is controlled by a shaft e_7 to which is setscrewed an arm e_8, the other end of which is under an arm e controlled by the foot-lever b_2. The inner end of e_8 is drawn up against the arm e by means of a spring e_9. When it is desired to ship the belt from the loose pulley b to the tight pulley b_1, the operator presses down the foot-lever b_2, which lowers the arm e together with the inner end of the arm e_8, turns the shaft e_7, and throws the shipper fork e_6 in toward the machine, thus moving the belt from the loose pulley b to the tight pulley b_1. The arm e carries a projecting pin e_1 that, when the foot-lever b_2 is pressed down, engages with a notch in the lever e_2 and thus holds the belt on the tight pulley.

In case it is desired to ship the belt from the tight to the loose pulley other than by the automatic device described, the handle e_3 on the lever e_2 is pushed toward the back of the machine, which withdraws the lower end of the lever e_2 from

Digitized by Google

above the pin e_1 and allows the spring e_6 to draw up the arm e, thus raising the foot-lever b_2. This allows the arm e_6 to be drawn up at the same time by the spring e_6 that tends to keep the inner end of e_6 pressed up against e. The lifting of the arm e_6 gives sufficient movement to the shaft e, to throw the belt from the tight to the loose pulley. The grooved pulley b_3 is attached to the loose pulley b and connected by a band to the pulley b_4, which is on the same sleeve as b_5, which is connected by a band to the grooved pulley b_6. Thus, when the driving belt is on the loose pulley b, the pulley b_6 imparts motion to the pulley b_6.

10. Stitching Mechanism.—When the cut of cloth that is placed in the cradle a has been entirely unwound, the end is attached to the pins d_1, Fig. 3, d_2, Fig. 1, at the ends of the machine; a new cut is then placed in the cradle a and the end of this cut also fastened to the pins d_1, d_2. The position of the two ends that are to be stitched together is shown by the dotted lines in Fig. 2.

Preparatory to stitching the two ends of cloth together, the cloth is stretched by means of the handle d, Figs. 1 and 3. A pin passes through the rod to which this handle is attached and is connected to the slide on which the pins d_1 are secured. After the cloth has been attached to the pins, the handle d is moved to the left until the arm rests in the notch shown, where it is secured until the stitching operation is completed, when it is raised out of the notch and moved to the right, in order thus to release the cloth. This stretches the cloth while it is being stitched, so that no wrinkles will be formed and also so that when released the cloth will not be narrower at the seam than elsewhere.

11. The action of the sewing mechanism is shown in Fig. 3. Just before the stitching action takes place, the driving belt is on the loose pulley and is imparting motion to the pulley b_6 by means of the pulleys b_3, b_4, b_5, as shown in Fig. 1. When the ends of the cuts have been placed on the pins and are in a suitable position to be stitched, the rod d_3, Fig. 3, is moved to the left, which throws the leather band from the

Digitized by Google

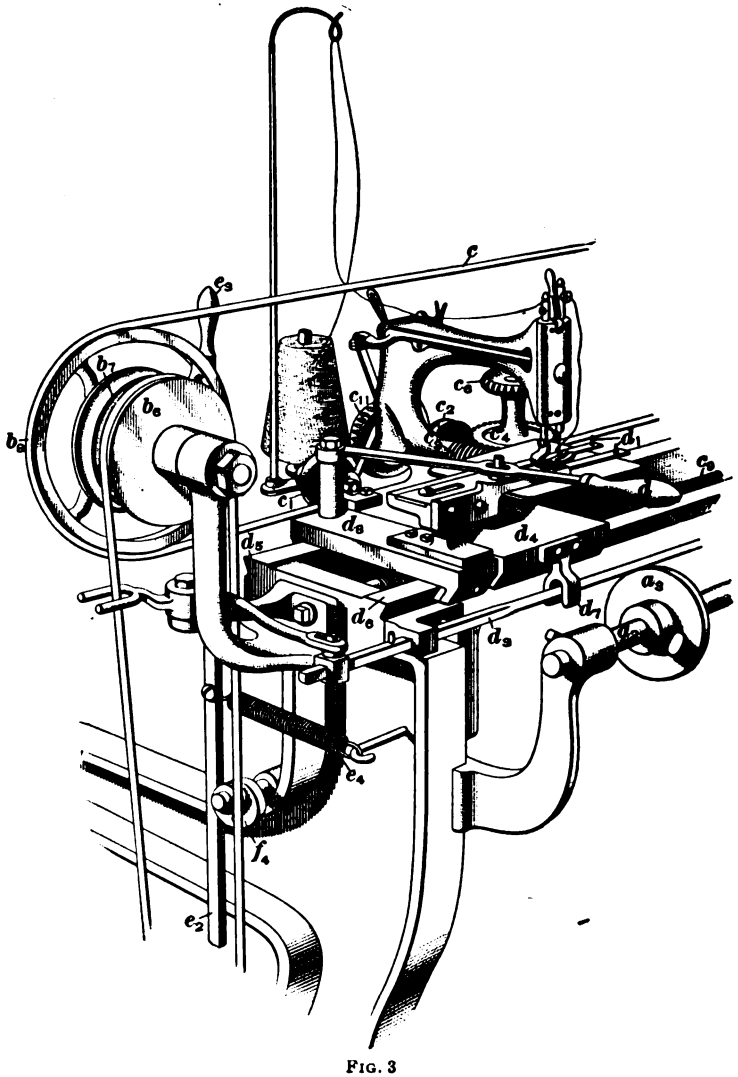

FIG. 3

Digitized by Google

loose pulley b_6 to the tight pulley b_7, and imparts motion to the pulley b_8 and the band c. This band passes around the two binder pulleys c_1, c_2 and a pulley c_{11} on the sewing-machine head, and by this means starts the stitching mechanism in operation.

At the same time, the sewing-machine head travels from one side of the machine to the other. The mechanism that accomplishes this part of the operation is as follows: The

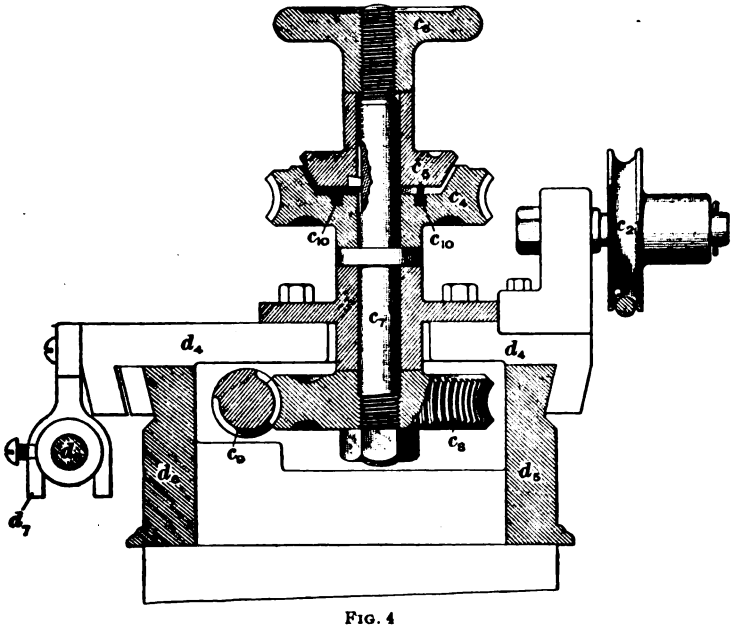

FIG. 4

pulley c_{11}, Fig. 3, that is attached to the sewing-machine head imparts motion to the worm c_3, which drives the worm-gear c_4. The worm-gear c_4, Fig. 4, forms a friction clutch with the casting c_5, which carries a key projecting into a keyway in the shaft c_7. At the upper end of this shaft is a thread on which is a hand wheel c_6, while at its lower end is a gear c_8, the teeth of which work in a stationary screw c_9. Before starting the stitching mechanism the hand wheel c_6 is screwed down, which forces the casting c_5 into contact with

Digitized by Google

the worm-gear c_4; consequently, as the worm c_3, Fig. 3, imparts motion to the worm-gear c_4, Fig. 4, the shaft c_7 is rotated, thus giving motion to the gear c_8. Since the screw c_9 is stationary, the gear c_8, as it revolves, must necessarily receive a horizontal motion. It is by this means that the sewing-machine head is moved automatically from one side of the machine to the other during the stitching operation.

The plate d_4 on which the sewing-machine head rests, slides on the supports d_5, d_6 and carries a projection d_7, shown in Figs. 3 and 4, which, when the head has traveled the full width of the cloth, comes in contact with a casting setscrewed to the rod d_3; this moves the rod d_3 to the right and shifts the band from the tight pulley b_7 to the loose pulley b_8, thus stopping automatically the stitching mechanism when the seam has been completed. To move the stitching mechanism back to its original position the hand wheel c_5, Fig. 4, is unscrewed, which allows the springs c_{10} to force the casting c_9 out of contact with the worm-gear c_4 and breaks the connection between this gear and the shaft c_7. When the parts are in this position, the plate d_4, Fig. 3, together with the different parts of its supports, may be moved by hand to any desired position.

12. After the two ends have been stitched, they are removed from the pins d_1, d_2 and are allowed to fall between the rods a_3, d_3, Fig. 2. The rolling mechanism is then set in operation by pressing down the foot-lever b_3, when the second cut of cloth is unrolled and rewound on the roll at the back of the machine. This operation is repeated with a sufficient number of cuts to form one large roll, which should be made large enough to facilitate the operation at the future machines, but not so large that it cannot be readily handled. Rolls are ordinarily made from 28 inches to 32 inches in diameter and contain from 800 yards to 1,200 yards of cloth.

13. The plate d_9, Fig. 3, to which the supports for the handle d, and the pins d_1 are attached, is setscrewed to the supports d_5, d_6, and does not move during the stitching operation.

Digitized by Google

The plate d_6 is not attached to the plate d_4, although in Fig. 3 the latter is shown close to the former, as the sewing machine is there represented in its initial, or starting, position with the presser foot ready to pass between the pins d_1 as the plate d_4 and sewing machine start on their movement to the right. On the other side of the machine is a corresponding plate d_6, Figs. 1 and 2, carrying a pillar d_{10} supporting the pins d_2. The plate d_6 is capable of sliding on the supports d_8, d_9, but does not move during the stitching operation, being secured to the supports by means of a thumbscrew d_{11}, Fig. 2.

The guide plates a_3, a_4 shown attached to the rod a_2 in Fig. 1, are secured to the rod by thumbscrews in such a position that they serve to guide the cloth correctly while it is being wound on the roll at the back of the machine, and also in suitable relative position to the pins d_1, d_2. It is not customary to change the positions of the plate d_6, the pins d_1, and plate a_3 except in extreme cases. When it is desired to make adjustments for different widths of cloth, the thumbscrew d_{11}, Fig. 2, is loosened and the plate d_6 moved inwards or outwards to bring the pins d_1 into the desired position, after which the thumbscrew is again secured. At the same time the guide plate a_4 attached to the rod a_2, Fig. 1, is adjusted.

14. The sewing-and-rolling machine that has been described occupies a floor space of about 7 feet by 4 feet. The driving pulleys are 12 inches by $2\frac{1}{2}$ inches, and are usually operated at a speed of 320 revolutions per minute. When operated at its full capacity, it can sew and wind in a day from 500 to 600 cuts, averaging 50 yards in length.

15. In some cloth rooms, the sewing machine is independent of the rolling attachment. In case a stationary machine is desired, that portion of the machine shown in the upper part of Fig. 1 is mounted on high stands resting on the floor and is driven by hand or by power as desired. Another arrangement when the sewing attachment is required to be used in connection with some machine,

Digitized by Google

other than a rolling machine, is to secure the upper portion of the mechanism shown in Fig. 1 to short stands suitable for attachment to any machine desired.

PORTABLE SEWING MACHINES

16. In many cases, it is necessary to stitch the ends of two pieces of cloth together in some part of the cloth room where it is more convenient to take the sewing machine to the cloth than to bring the cloth to the machine. This is the case when the stitches that bind the ends of two pieces together in a large roll have been broken or cut, through some cause, and a part at least of the two ends separated. It would be undesirable to run the entire roll of cloth through the sewing-and-rolling machine simply for the purpose of putting in these few stitches, and, in fact, in many cases it would not be possible, as the defective stitches are often not discovered until the cloth is being run through another machine.

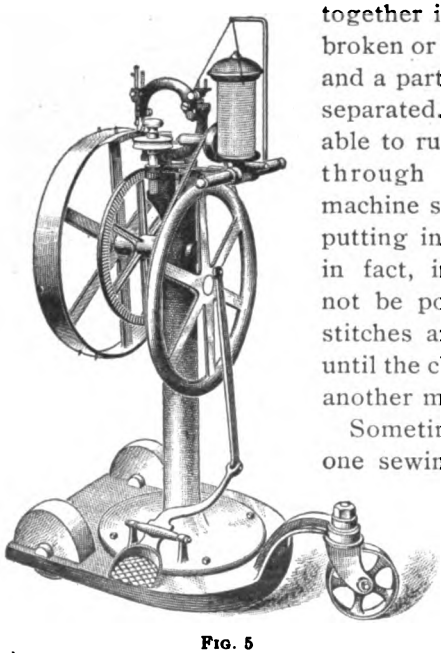

FIG. 5

Sometimes it is desirable to have one sewing machine available for use with several other machines; for example, when the cloth from a large roll has been run through a later machine and it is desired to attach the end of a new roll to the tail-end of the one that has been run through. In such cases, a portable foot-power sewing machine, shown in Fig. 5, is used. This machine rests on wheels and consequently can be moved readily from one part of the room to another, as may be desired. In operation the ends of the two pieces of cloth

Digitized by Google

that are to be sewn together are attached by pins to a slowly rotating wheel. As the machine is operated by means of the treadle, this wheel feeds the cloth under the presser foot of the sewing attachment where the stitching is inserted. In other cases where the amount of available floor space is limited, the sewing machine is suspended from the ceiling of the room, and in still other cases where one sewing machine is required at various points in the room, the sewing mechanism is suspended from a track attached to the ceiling, so that it may be moved to different points in the room where it is required. In such cases, of course, the sewing is performed by hand power.

ROLLING MACHINES AND HAND SEWING

17. Many times, especially in the older cotton mills, machines are used for the same purpose as the sewing-and-rolling machine described, but constructed and operated without the sewing attachment. In general construction, they are similar to the machine shown in Fig. 1, although for special fabrics, such as those exceptionally wide and heavy, different styles of construction are adopted. The mechanism of the machine requires no description beyond that already given. With these machines, the ends of consecutive pieces of cloth are sewed together by hand, the operator using for this purpose a long, heavy needle with thin twine knotted at one end and longer than the width of the fabric. The tail-end of each piece is placed against the new end from another piece and the needle passed alternately through the cloth from one side to the other at intervals of about 2 inches. The knotted end of the twine remains at one edge of the cloth, while the operator ties another knot at the other edge after the thread has been passed through the cloth, so as to prevent its being drawn out in passing on to the roll or through a succeeding machine. This system is largely used in cloth rooms where consecutive pieces of cloth are sewed together temporarily, since it occupies less time and the thread can be easily drawn out later, but is not as satisfactory as machine sewing.

Digitized by Google

BRUSHING AND SHEARING

SHEARING-AND-BRUSHING MACHINES

18. Cotton cloth as it leaves the loom has loose threads lying on its surfaces, both face and back, and carries more or less dust and particles of foreign matter that have dropped on it during the process of weaving, or have been introduced with the yarn of which it is composed. It is desirable that these be brushed off. Ends of yarn also project from the cloth in places, and there is a fibrous cover to the fabric that is not uniformly even nor laid in one direction. In the case of certain cloths, it is desirable that these projecting fibers or threads be sheared off close to the surface of the fabric, after which a final brushing is given to improve the surface and lay the fibers in one direction. The shearing is especially desirable in those cloths where the pattern should show up prominently, and in ginghams and such fabrics, where it is desired to have the colors appear bright and lustrous. The operations of brushing and shearing are performed in a **shearing-and-brushing machine,** such as is shown in Fig. 6; Fig. 7 is a sectional view of the same machine.

In operation, the roll of cloth g, as it comes from the sewing-and-rolling machine, is placed in stands g_1 at the back of the machine. The cloth is then threaded through a slotted bar g_2 in an iron guide frame and partly around a number of rods g_3 before being passed under the roll g_4 on the machine. The object of passing the cloth around the rods g_3 is to remove wrinkles and straighten out turned selvages; also, to secure a uniform tension; it may be passed around these rods in any desired manner, according to the amount of tension desired. After being passed under the roll g_4 on the machine, the cloth passes partly around two additional tension rods g_5, g_6 that are adjustable, then over the bar g_7 and into the machine. The bar g_7 is constructed, as shown in Fig. 8 (*d*), in such a manner that the cloth, in passing over

Digitized by Google

Digitized by Google

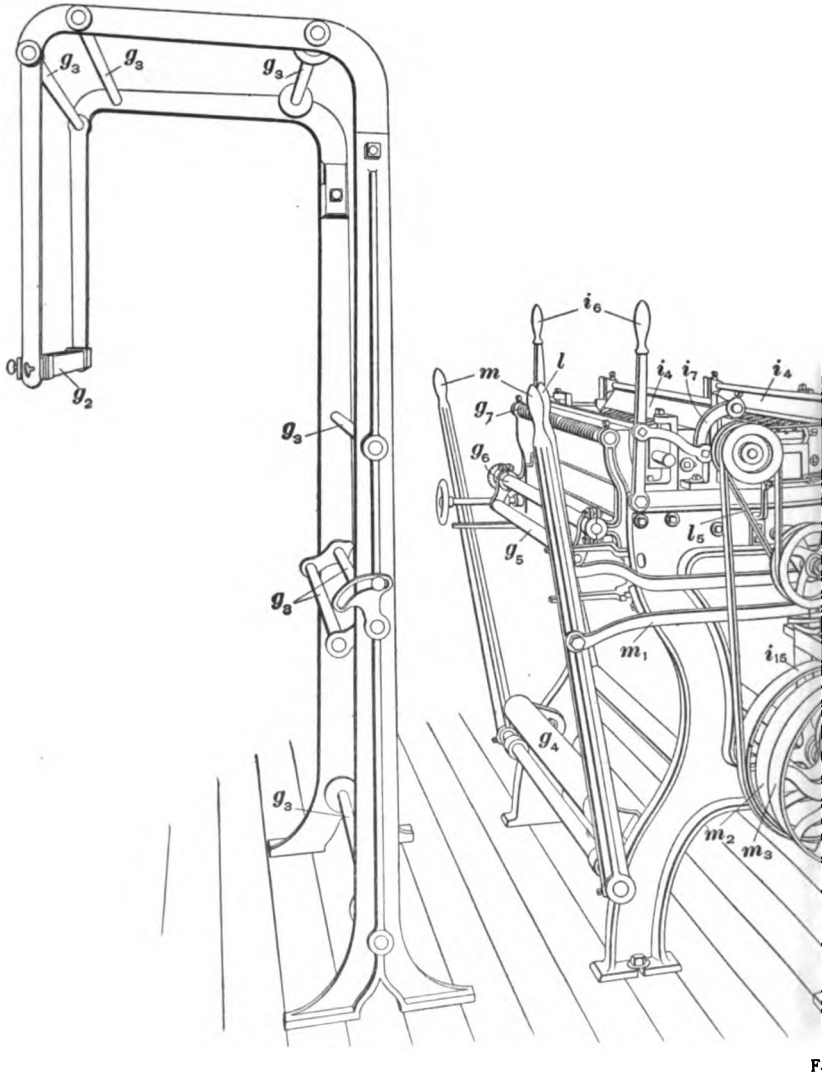

F

Digitized by Google

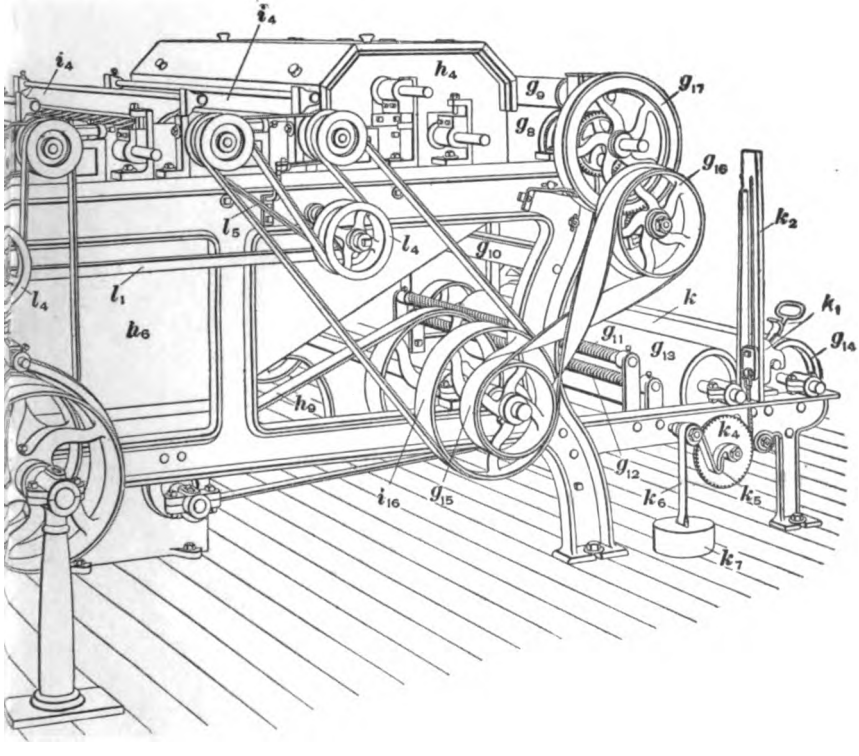
i_4
i_4
h_4
g_9
g_8
g_{17}
g_{16}
k_2
l_5
l_4
g_{10}
l_4
l_1
h_6
k
k_1
g_{11}
g_{13}
g_{14}
h_9
k_4
g_{12}
i_{16}
g_{15}
k_6
k_5
k_7

FIG. 6

Digitized by Google

Digitized by Google

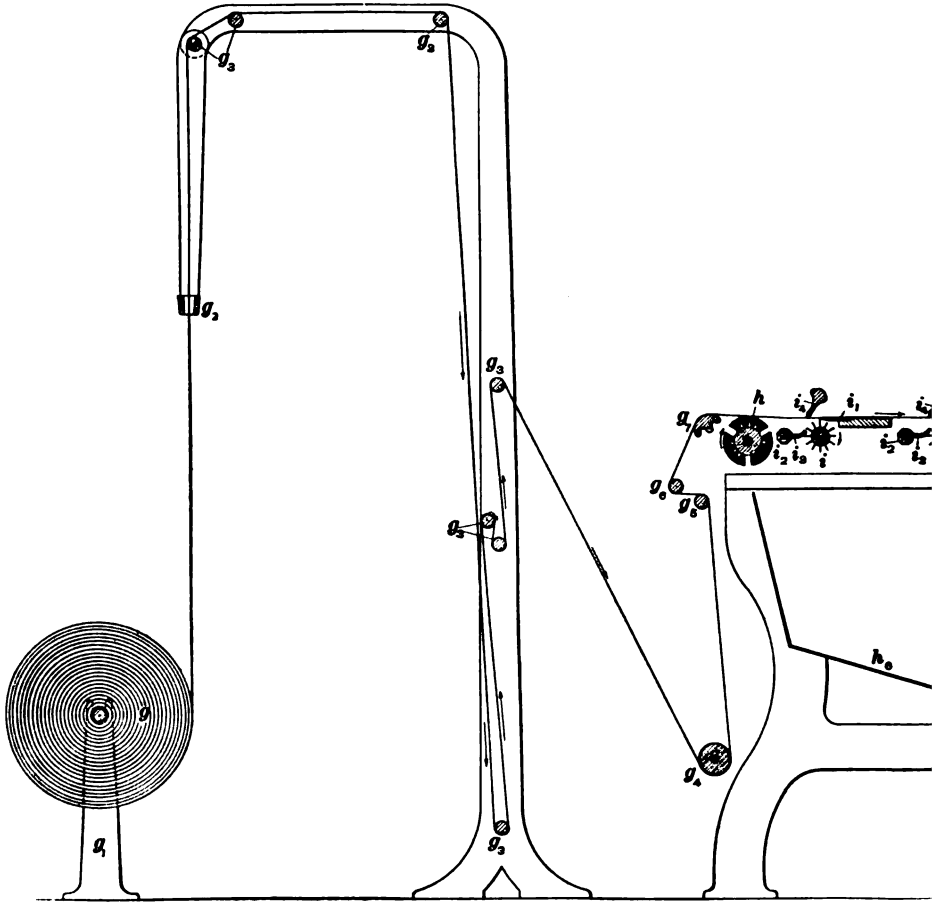

Digitized by Google

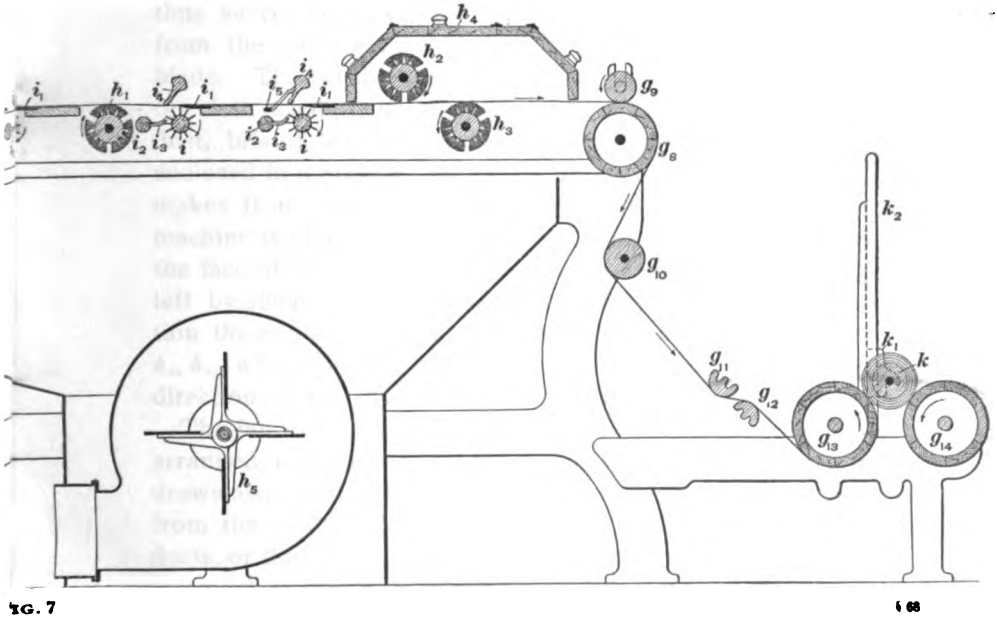

FIG. 7

Digitized by Google

Digitized by Google

it, is spread out to its full width and passes into the machine perfectly free from wrinkles. This is accomplished by means of two series of flutes, one series slanting toward one end, and the other toward the other end of the bar, as shown in the illustration, with the result that as the cloth passes over the bar the tendency is to stretch it in its width.

In passing through the machine, the cloth is acted on by four brushes h, h_1, h_2, h_3, Fig. 7, three of which h, h_1, h_3 operate on the face of the cloth, which is the under side in passing through the machine, and one h_2 on the back of the cloth. Four *revolvers* i, i, i, i, in conjunction with their respective ledger blades i_1, i_1, i_1, i_1, shear the projecting fibers from the surface of the cloth. It is customary to have each revolver or each two revolvers preceded by a brush running in the same direction as the cloth, but at a greater speed; the brush thus serves to raise the fiber so that it can be readily cut from the surface of the cloth by the revolver and ledger blade. The brush h_2 that comes in contact with the back of the cloth is simply for the purpose of removing loose threads, dust, bits of leaf, etc. from this side of the fabric. It is enclosed in a hood h_4, so as to prevent the flyings that it makes from passing into the air of the room in which the machine is placed. The brush h_3 gives a final brushing to the face of the cloth, removing loose ends of yarn and fiber left by shearing and laying down smooth and in one direction those fibers forming a part of the cloth. The brushes h_2, h_3, which finally brush the fabric, run in the opposite direction to the cloth where they are in contact with it.

The fan, or blower, h_5, which is enclosed in a casing h_6 so arranged as to enclose all the working parts of the machine, draws away all the flyings, fiber, and foreign matter removed from the cloth and discharges them, through a system of ducts, or flues, outside the mill. The amount of such matter removed in this way is considerable.

After passing through the machine, the cloth emerges between two rolls g_8, g_9, passes around a guide roll g_{10}, under the bar g_{11}, over the bar g_{12}, both of which are constructed similar to the bar g_7, then under the roll g_{13} which

Digitized by Google

is covered with sandpaper, and finally is wound around the roll k by the roll g_{13} and an additional sandpaper-covered roll g_{14} that form what is known as the *rolling head.* The rolls g_8, g_9 are positively driven and are the means by which the cloth is drawn through the machine, while the rolls g_{13} and g_{14}, also positively driven, take the cloth as fast as it is delivered and wind it into a roll.

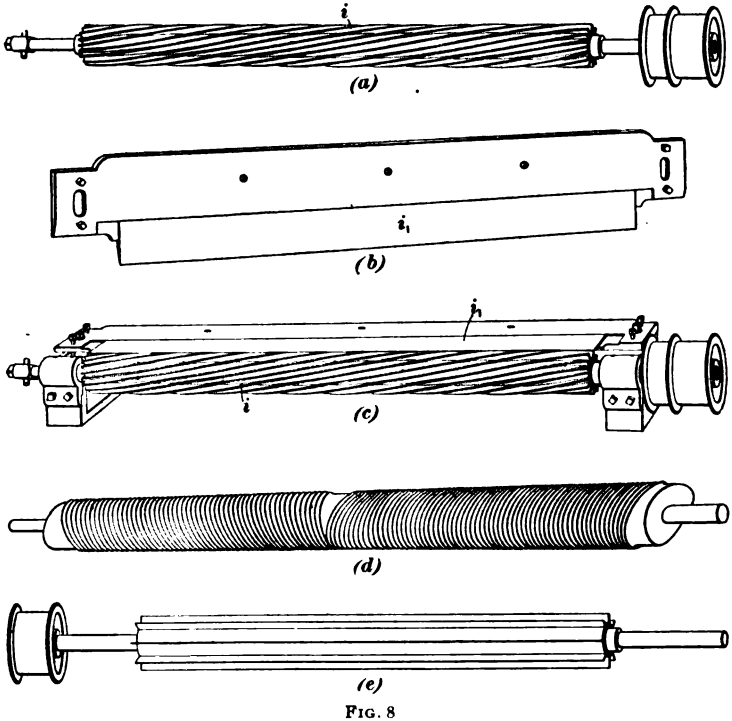

FIG. 8

19. The **brushes** of this machine are of ordinary construction and consist of a wooden barrel into which short, stiff bristles are inserted. Their only object is to clean the cloth of impurities and raise the fibers so that they may be readily cut by the revolvers and ledger blades.

20. Fig. 8 (*a*) shows the construction of a **revolver,** while Fig. 8 (*b*) shows the construction of a **ledger blade.**

Digitized by Google

The revolver has cutting blades arranged spirally on its surface so that as it revolves the projecting fibers of the cloth will be cut between them and the ledger blade, with which the cloth is in contact, in a manner similar to the action of a pair of scissors. Fig. 8 (*c*) shows a revolver and a ledger blade as mounted in the machine, with the ledger blade set lightly in contact with the blades of the revolver and its edge directly over the center of the revolver shaft. These parts together are known as a *set of blades*, or sometimes as a *shear*.

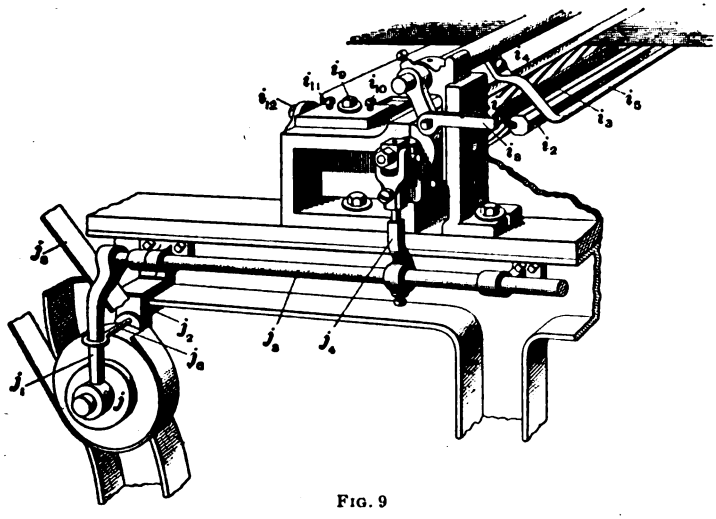

FIG. 9

The revolvers, in addition to having a rotary motion, also have a slight traversing motion, which not only aids them in shearing the cloth, but prevents uneven wear of the revolver or ledger blade. The method of imparting this traverse motion to a revolver is shown in Fig. 9. The revolver is supported at each end by stationary bearings, which hold it in the proper position with relation to the ledger blade, but still allow it to be moved laterally for a certain distance. This lateral, or traversing, movement of the revolver is obtained in the following manner: A rod *j*, that is supported by brackets attached to the framework carries at one end an

Digitized by Google

arm j_1 that is operated by a cam j, being held in contact with the cam by a spring j_3 acting through a rod j_2. As the cam revolves, the lower end of the arm j_1 is caused to move in and out and consequently imparts a rocking motion to the rod j_2. Attached to the rod is an arm j_4 that carries a forked casting, each arm of which contains a slot. Between the arms of this fork is a small casting that carries two pins, one on each side, that project into the slots in the fork. This latter casting is carried by the shaft of the revolver, and although when moved laterally it imparts the desired traversing motion to the revolver, it does not interfere with the rotation of the latter. Since the rod j_2 receives a rocking motion it imparts a swinging motion to the forked casting, which in turn imparts the traversing motion to the revolver.

As each revolver is connected to the rod j_2 in the same manner, as shown in Fig. 14, a traversing motion is consequently imparted to each revolver.

In order to maintain the necessary contact between the cloth and the ledger blades, cloth rests, or guides, i_4, Fig. 7, are placed in front of each revolver on the upper side of the cloth. Their function is simply to press down the cloth so that as it passes the shearing point it will be in perfect contact with the ledger blade and thus the fibers will be evenly trimmed. Slotted bars i_3 having a wick, or oil swab, i_5 inserted in them are so placed in front of each revolver that the swab rests on the cutting blades. These swabs should be well soaked in oil so that they will lubricate the cutting blades and prevent their *screaming*, which will occur if they are allowed to run dry against the ledger blades.

21. When the seams formed by stitching the ends of two cuts of cloth together are passed through the shearing-and-brushing machine it is necessary, in order to prevent cutting the cloth, to raise the cloth guides i_4 so that the brushes h, h_1 will lift the cloth away from the revolvers and ledger blades. Since there is no brush immediately in front of the last revolver, a lifter rod i_6 is attached to the last cloth rest i_4 so as to pass underneath the cloth at this point and

Digitized by Google

thus serve the same purpose. These guides are raised by means of two handles i_8, Fig. 6, either of which when operated raises a lever i_7 attached to the first cloth guide; and as all the other cloth guides are connected by a bar i_9, as shown in Fig. 14, this raises them all. This is done while the machine is in operation, the handle i_8 being pulled forwards for a short time while the seam is passing through the machine.

The ledger blades may be set to the revolvers as shown in Fig. 10. The blade is bolted to the frame by a bolt i_7 and may be raised or lowered from the revolver by two adjusting

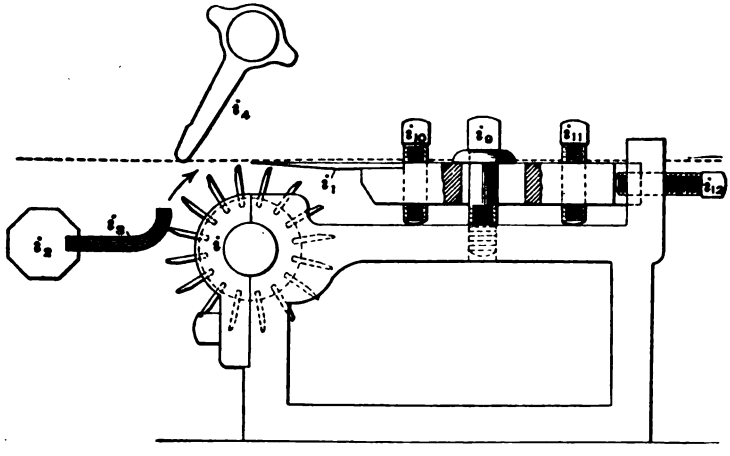

FIG. 10

screws i_{10}, i_{11}; a screw i_{13} enables it to be set forwards after it has been ground sufficiently to be shortened slightly. Fig. 10 shows only one end of a ledger blade, but the arrangement is the same for the other end and for all the blades.

Occasionally shears are arranged for the upper side of the cloth; when this is the case the arrangement is as shown in Fig. 11. The ledger blade in this case is adjusted by means of the screws i_{10}, i_{11}, i_{13}, and the oil swab i_2 is placed over the revolver. A guard i_{12} is provided to press the cloth down and away from the revolver and ledger blade when seams are to be passed through the machine. This is

Digitized by Google

accomplished by the same handle i_6, Fig. 6, which when operated throws the guard i_{13} down under the revolver, as shown by the dotted lines in Fig. 11, and at the same time, by means of the connecting-rod i_{14}, lowers the cloth guide i_4, which in this case is placed underneath instead of over the cloth; the position of the cloth guide when it is lowered is also shown by dotted lines, while the corresponding positions of the cloth are shown by the two horizontal dot-and-dash lines.

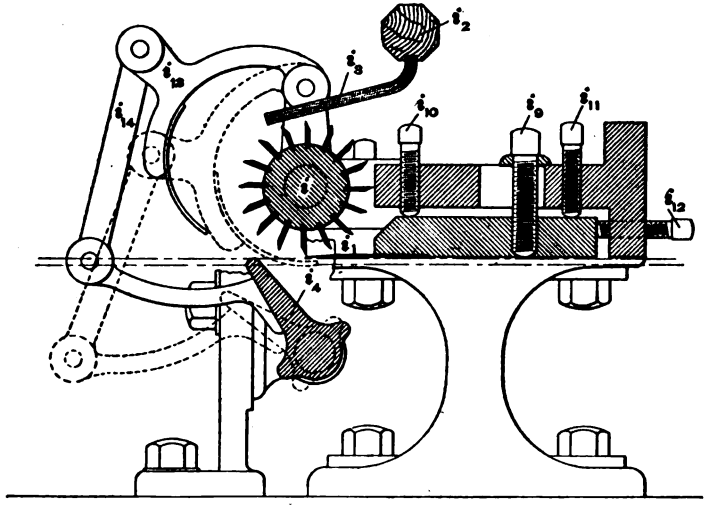

FIG. 11

22. In order to be sure that the cloth will not be cut when the seams are being passed through the machine, the driving belts of the revolvers are slackened and a friction is applied to them to check their rotary motion when this takes place. This is accomplished in the following manner: The belts that drive the revolvers pass around binder pulleys l_4, Fig. 12, that revolve on studs fastened in the castings l_2, which are pivoted at l_3. These castings are connected by a rod l_1, which is connected to a lever l, and also to friction bands l_5 that pass around brake, or friction, pulleys on the shafts of the revolvers and are attached to brackets l_6. When the

Digitized by Google

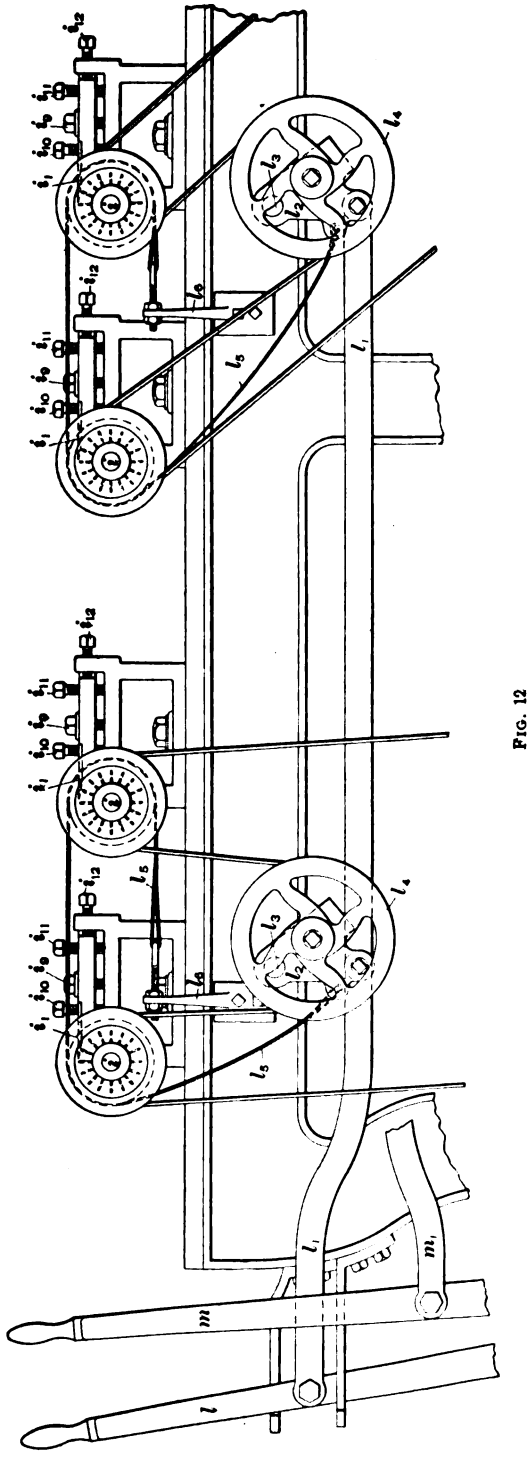

FIG. 12

Digitized by Google

handle l is forced forwards, the binder pulleys, in swinging about the center l_3, slacken the belts, and at the same time the steel friction bands l_4 are tightened and the motion of the revolvers checked.

23. The construction of the **rolling head** is shown in Fig. 13. The cloth in being wound is wrapped about a roll k, the journals of which are in contact with castings k_1 that slide in slotted stands k_2. Motion is imparted to the cloth

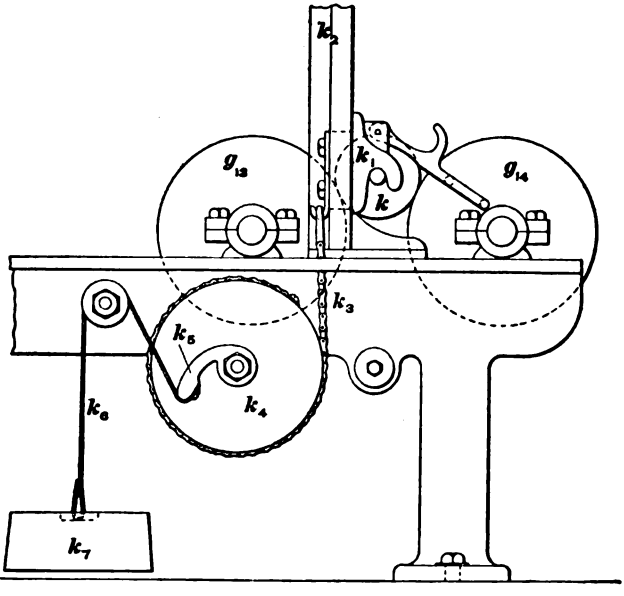

FIG. 13

by two sandpaper-covered rolls g_{13}, g_{14}. The chain k_3 attached to the casting k_1 is wrapped around a disk k_4, to which its other end is attached. Attached to a projecting wing k_5 cast in one piece with this disk is a strap k_6 that supports a weight k_7. As the roll of cloth increases in diameter, the castings k_1 are raised and the chain k_3 imparts motion to the disk, which raises the weight k_7. As this proceeds, the strap k_6 becomes wrapped around the smaller diameter on the wing k_5, so that the pressure on the journals of the roll k

Digitized by Google

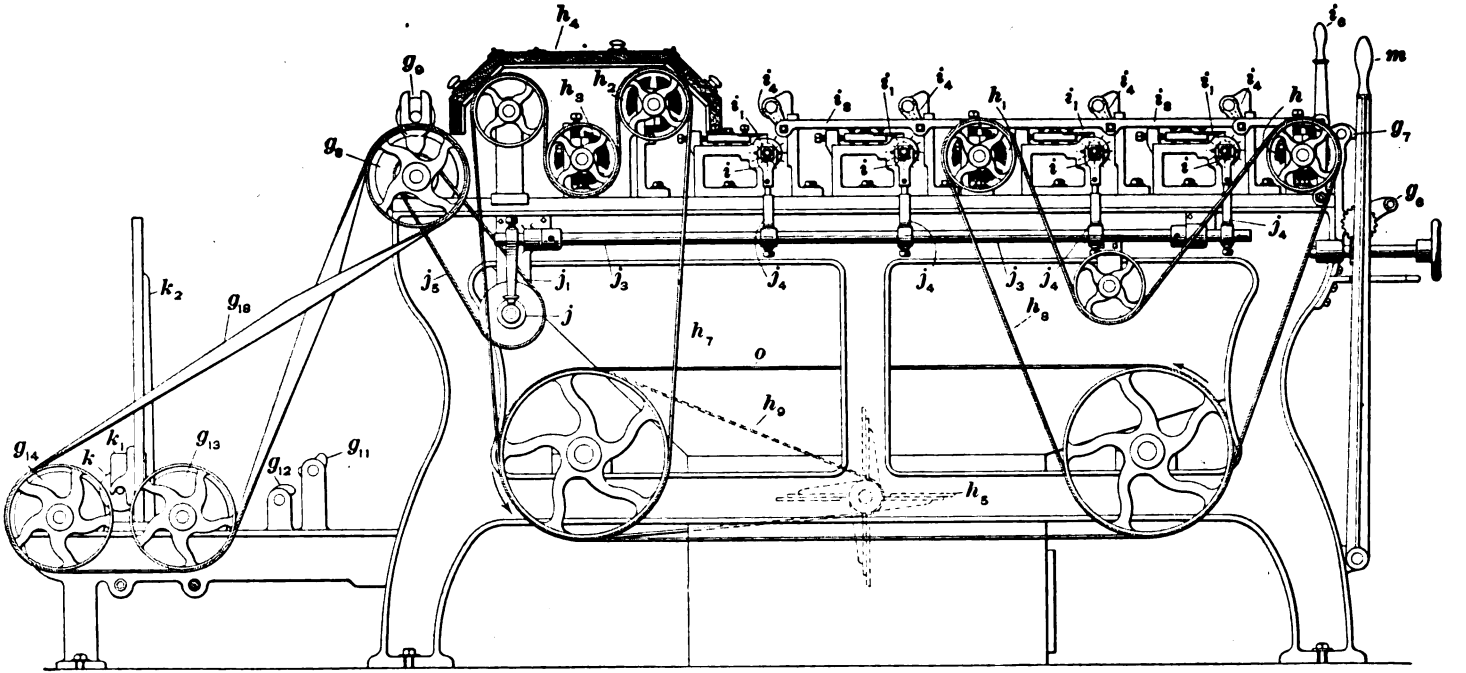

FIG. 14

Digitized by Google

on which the cloth is wrapped is decreased correspondingly as the diameter, and consequently the weight, of the roll of cloth increases.

24. The **driving** of the shearing-and-brushing machine is as follows, the references being to Figs. 6 and 14, the former of which shows the belts on one side, and the latter the belts on the other side of the machine: The motion of the machine is primarily controlled by two shipper levers m, either of which, through the rod m_1, controls the shipping of the driving belt on the tight and loose pulleys m_2, m_3. The first two revolvers, as shown in Fig. 6, are driven by a belt from the pulley i_{15} on the main shaft of the machine. The last two revolvers are driven by a belt from the pulley i_{16} on a cross-shaft, to which motion is imparted by a belt o, Fig. 14. On the same shaft is a pulley that by means of a belt h_8 drives the fan, or blower. A pulley g_{18}, Fig. 6, on this shaft drives, with a cross-belt, a pulley g_{19}, while a gear compounded with g_{19} drives a gear g_{17} that is attached to the shaft of the roll g_8. The roll g_8 is driven by gears from the shaft of the roll g_9. On the opposite side of the machine the brushes are driven by belts h_7, h_8, as shown in Fig. 14. The rolls g_{12}, g_{14} are driven by a belt g_{13} from a pulley on the shaft of the roll g_8. The cam j is also driven by a belt j_1 from a pulley on this same shaft.

25. The machine represented in Fig. 6 is one of a large number of types of shearing-and-brushing machines. These machines differ very largely in construction:

1. They are made with from one to six sets of shears and from one to three brushes on one side of the cloth, usually the face side, in addition to the two finishing brushes —one on each side of the cloth. The number of shears and brushes on a machine depends on the finish required by a cloth, its condition, the material of which it is made, and the speed at which it is drawn through. Generally speaking, the coarser the cloth, the greater is the number of shears, etc. required, but some kinds of the finest cloth require a large number of shears and brushes. Where there is only

Digitized by Google

one shearing arrangement on one side of the cloth, there is usually one brush preceding it in addition to the two finishing brushes. Where there are two or more sets of shears on one side of the cloth, one brush precedes each set, or each two sets, of shears.

2. They may be constructed to shear and brush both sides of the cloth at the same time, with one or more sets of shears and brushes operating on the back of the cloth at the same time that others are operating on the face of the cloth, thus shearing and brushing both sides of the fabric by once running it through.

3. Card rolls may be added; these are wooden rolls covered with fillet card clothing, the teeth in which are somewhat straighter than those in ordinary card clothing; the rolls are run with the point of the teeth pointing backwards, in order to prevent forming any nap on the goods. They also are arranged on either one or both sides of the cloth and vary in number. A fuller description of them will be given in connection with the cotton brushing-and-calendering machine.

4. Emery rolls and beaters may be added; these are attached to the feed-end of the machine and are described in connection with the cotton brushing-and-calendering machine.

5. The rolling head may be replaced with a calender-rolling machine, by which the cloth is smoothed and pressed before being wound in a roll. This may be arranged for either cold rolling or hot calendering, with or without a steam moistening arrangement. This mechanism will be described later.

It will thus be seen that the differences in construction, caused by the variable number and arrangement of shears, brushes, and card rolls, and by the use or non-use of emery rolls, beaters, and hot or cold calender rolls, give an almost endless combination of mechanisms, resulting in hundreds of different arrangements of shearing-and-brushing machines; about fifty types are in regular use. The general principles, however, are here described, so that there should be no difficulty in thoroughly understanding the construction

Digitized by Google

and operation of any of these machines that may be met with in practice. The variable constructions prevent any definite information being given as to the dimensions of shearing-and-brushing machines, but for general guidance it may be stated that these machines vary in length from 8 feet to 12 feet; the width is generally about 7 feet in all machines. About 500 cuts per day is a good average production for a shearing-and-brushing machine.

SHEAR GRINDER

26. When the revolvers or ledger blades of shearing machines become dull, they are sharpened on a **shear grinder.** This is a machine of substantial construction carrying an iron cylinder that has a traverse of about 4 inches, and against which the revolvers or ledger blades are held. The cylinder is kept supplied with fine emery and oil for grinding purposes. When the grinder is used for sharpening the revolvers, they are held in a suitably adjusted stand and driven by chains and sprockets, so as continuously to bring their different parts against the grinding cylinder. When the ledger blades are being ground, a different arrangement of stand is applied to hold the blades in a suitable position, and they are pressed against the grinding roll by levers and weights.

COTTON BRUSHERS

27. The **cotton brusher** performs work similar to that of the shearing-and-brushing machine described, except that it has no shearing operation. It, too, is constructed in many different ways, with a varying number of brushes on each side of the goods, and in combination with other mechanisms for producing various results. Fig. 15 shows a section of one type of this machine that not only comprises a complete brushing machine proper, but also includes emery rolls, beaters, and card rolls, as well as a calender-rolling attachment. The framework *a* of the main machine rests on the floor of the room and is arranged with a level horizontal

Digitized by Google

Digitized by Google

Digitized by Google

surface at the upper part a_1, on which rest brackets carrying the brushes, card rolls, and the rolls that draw the cloth through the machine. At the feed-end of the machine is attached a bracket c carrying in suitable adjustable bearings the emery rolls c_1, c_2, so arranged that one operates on the face of the cloth and the other on the back. Each emery roll consists of a wooden barrel covered spirally with a fillet of emery cloth secured at each end, or in some cases with a coating of coarse emery glued on to the surface of the roll.

28. The cloth d passes through the machine in the direction shown by the arrows, first under the guide rolls d_1, d_2, thence upwards and between the two emery rolls. These rolls revolve in the opposite direction to that in which the cloth is passing, and have a scraping action, which for the most part removes motes, leaf, and rough places projecting on each side of the fabric, those that are not removed being sufficiently loosened to facilitate their removal by the beaters, card rolls, or brushes of the machine. The beaters e_1, e_2 are supported in adjustable bearings on a bracket e so that one operates on the face of the fabric and the other on the back. Fig. 8 (e) represents one of these beaters removed from the machine. It has steel blades radiating from the barrel and set equal distances apart, each side of the edge of the blade forming a sharp corner. These beaters run in the opposite direction to that in which the cloth passes, and knock off the knots and nubs that in many cases cannot be removed by any other means, as well as loosen the dust and dirt so that it may be brushed off by the card rolls and bristle brushes.

The cloth continues its passage over a guide roll d_3 and guide bar d_4 and next comes under the action of four card rolls f_1, f_2, f_3, f_4 supported from the framework by brackets f and adjustable by means of the setscrews f_5. The card rolls f_1, f_3 operate on the under side of the cloth and f_2, f_4 on the upper side. These rolls are covered with card fillet and run in the opposite direction to that in which the teeth point, thus avoiding the formation of a nap on the

Digitized by Google

cloth, but serving to remove motes, specks, etc. After passing between these rolls, the cloth is subjected to the action of two bristle brushes g_1, g_2 mounted in adjustable bearings on brackets g that are set on the horizontal surfaces of the framework of the machine. These brushes are set with stiff bristles and correspond in their construction and operation to h_2, h_3, Fig. 7. The cloth then passes between the rolls h_1, h_2, which draw it through the machine. These rolls, in construction and operation, correspond to those shown at g_2, g_3, in Fig. 7, and are described in connection with the machine there illustrated.

29. The emery rolls and beaters are incased by the removable cover b, while the brushes and card rolls are covered by the upper cover b_1. Both of these covers are so constructed as to admit of their being partly removed, thus affording facilities for inspecting and cleaning the machine. An exhaust fan l is provided, which removes from the incased portion most of the lint, dust, and smaller particles of fibrous or foreign matter, delivering them into a flue or chamber arranged to receive them. The threads in many cases remain on the surface of the brushes or slightly embedded between the bristles and have to be removed at intervals—several times each day.

CALENDER-ROLLING MACHINE

30. The machine shown in Fig. 15 also differs from that shown in Fig. 6 in the treatment of the cloth after it leaves the machine proper. In the machine shown in Figs. 6 and 7, the cloth was simply rolled at a rolling head, but in the case of the machine shown in Fig. 15, an entirely separate mechanism is placed in front of the machine, known as a **calender-rolling machine**, the object of which is not only to form the cloth into a roll, but before doing so to pass it between heavy rolls for the purpose of smoothing out the goods. The cloth passes from the brusher under and partly around a guide roll d_2, thence under a guide bar i_1 and over a second guide bar i_2, beneath which is placed

Digitized by Google

a hollow steam vapor cylinder i. This is connected to a steam pipe, and by means of perforations on its upper side allows a light vapor of steam to impinge on the cloth as it passes between the two guides i_1, i_2; the flow of steam is very small and can be regulated as desired. The fabrics only require to be moistened sufficiently to aid the heavy calender rolls in smoothing out the cloth and to give it a softer finish and feel. The steam is admitted to the vapor cylinder through a cut-off valve so arranged that it shuts off the supply of steam entirely when the machine is stopped, thus preventing any excessively damp places in the fabrics. This is accomplished by connecting the lever o_2 that operates the valve to the shipper rod o by a rod o_1; thus, as the shipper rod is operated to stop the machine, the steam is automatically cut off from the vapor cylinder i; when the machine is started again the steam is admitted to it without further attention on the part of the operator.

31. After leaving the guide i_2, the cloth passes under and partly around the lower calender roll j and upwards and partly around the upper calender roll j_1, thence to the cloth roll j_2, around which it is wound. In passing between the rolls j, j_1, the cloth is subjected to a certain amount of pressure, since both rolls are of considerable weight, thus calendering or compressing the fabric and producing a smooth surface. These rolls may be driven at the same surface speed, in which case they have merely a compressive action; or, by the use of unequally sized gears, the upper roll may be driven slightly faster than the lower one, thus producing an ironing effect on the fabric and increasing the smoothing action of the rolls. The rolls j, j_1 are hollow and fitted with stuffing-boxes, piping, and valves, so that steam may be admitted to the inside of both rolls in order to have them hot while the cloth is passing through; or in case it is desired that the fabric be cold rolled, the steam may be shut off and the fabric calendered without heat. In some cases where it is never desired to use the machine with hot rolls, smaller calender rolls are used without any arrangement for heating them.

Digitized by Google

32. At each side of the calender-rolling arrangement is a long rack, similar to k, Fig. 15, that rests on one of the journals of the wooden roll on which the cloth is wound. A gear p_3 on a cross-shaft p extending across the calender-rolling arrangement engages with the rack k, a similar gear engaging with the rack on the opposite side, which is not shown in Fig. 15. Attached to this shaft is a friction pulley p_1, around which passes a friction strap p_2 that is connected to a lever p_4. This lever is pivoted at p_5 and so arranged that by raising it the friction can be immediately released, or by lowering it, as shown in Fig. 15, the friction can be applied to the friction pulley. When in the position shown, the lever p_4 is held securely in place by means of a pin p_6 that engages its hooked upper part. By means of this friction arrangement the racks place a considerable amount of pressure on the cloth as it is wound, so that a smooth, hard, and even roll of goods is produced. This pressure may be easily regulated by increasing or decreasing the amount of friction that the strap p_2 places on the friction pulley p_1.

When a sufficient length of cloth has been wound around the cloth roll, it is removed by unhooking the latches m and swinging out the standards m_1, which are on each side of the calender-rolling head and pivoted on a pin at the lower part. These standards are lowered and the lever p_4 raised, while by means of the hand wheel n, the racks are raised so as to relieve the pressure on the cloth roll, which is then removed from the machine and a new one inserted.

It is found, in practice, that by calendering the cloth in this way, especially in the case of hot calendering and where the upper roll is run faster than the lower one, there is a gain in length. This varies from $1\frac{1}{2}$ to 5 per cent. and can be arranged to be still greater than this; but it is not desirable to stretch the goods too much, nor is there any ultimate advantage in doing so, since a certain length of the cloth has to be of a given weight, and the goods have to be made correspondingly heavier at the loom to offset the stretch.

Digitized by Google

33. After the roll of cloth has been formed and removed from the machine, it is customary to allow it to stand several hours or over night, after which the result of the steaming, calendering, and remaining under pressure for a considerable period is found to have imparted a very smooth appearance and feel to the fabric.

34. A cotton brushing machine with the attachments described occupies a floor space of about 10 feet by 7 feet and carries $14'' \times 3\frac{1}{2}''$ tight and loose pulleys on a shaft revolving at a speed of about 400 revolutions per minute. Most of the belts connecting the various parts of the machine are 2 inches in width.

Digitized by Google

Digitized by Google

CLOTH ROOMS

(PART 2)

TRIMMING-AND-INSPECTING MACHINES

1. In many mills where the cloth manufactured does not require shearing, heavy brushing, or calendering, or is not of sufficient strength or suitable construction to withstand the strain of such processes, the shearing-and-brushing machines of the types previously described are not used; this also renders the use of sewing-and-rolling machines unnecessary. In place of these machines one known as the **trimming-and-inspecting machine,** sometimes called a *cloth trimmer*, or a *brushing-and-inspecting machine*, is adopted. The object of this machine is to give a slight brushing to one or both sides of the fabric, thus removing loose threads, lint, dust, etc., and at the same time to afford a ready and rapid means of inspecting the cloth, if so desired. The machine is usually constructed to take the cloth in short pieces just as they are taken from the loom, although in some few cases it is made to take a roll from the sewing-and-rolling machine. It is also sometimes built without a brushing arrangement, in which case it becomes merely an inspecting machine.

A view of a common type of cloth trimmer is given in Fig. 1, while a section through the machine is shown in Fig. 2. This machine is built for both brushing and inspecting and is constructed to receive only one piece, usually either a single or a double cut, so that the cloth is not passed through the sewing-and-rolling machine before coming to this machine. The piece of cloth n, Fig. 2, is placed in the cradle n_1 and the end passed over the roll n_2, partly around

Copyrighted by International Textbook Company. Entered at Stationers' Hall, London

Digitized by Google

the roll n_3, and then to the roll n_4, from which it passes into the machine. The cloth then passes partly around the roll n_5, after which it comes in contact with the brushes n_6, n_7, which may be arranged according to several methods. In some cases only one brush is used, which brushes the face of the cloth, while in other cases two brushes are used, both coming

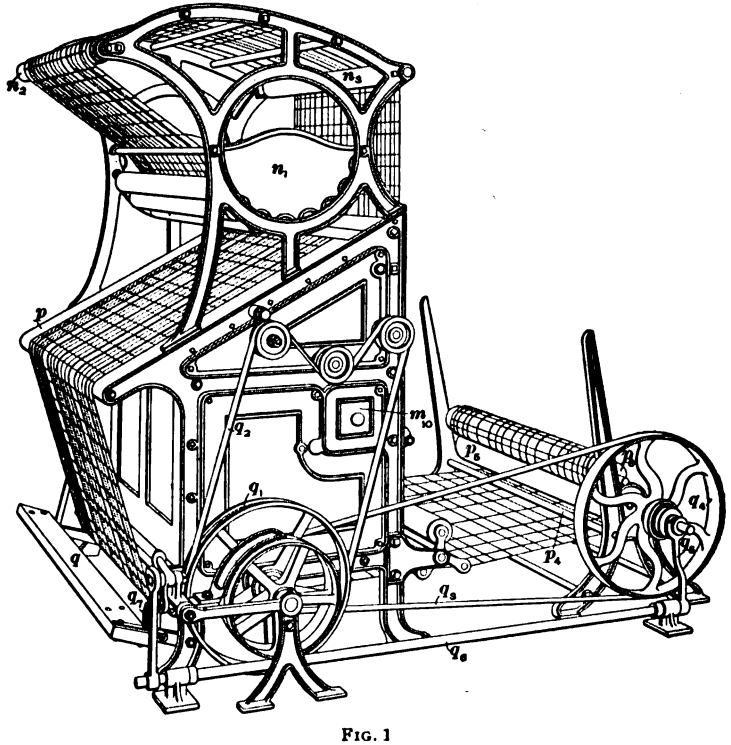

FIG. 1

in contact with one side of the goods; in still other cases the brushes are arranged as shown in Fig. 2. The brushes revolve in the opposite direction to that in which the cloth passes. From them, the cloth passes partly around the roll n_8 and is then lightly brushed by the brush n_9, after which it passes on to the inspecting table p, which is painted black. As the cloth passes over this table the attendant

Digitized by Google

closely inspects it. In case any defect is noticed, the machine is stopped and the defect marked either by passing a short piece of colored thread through the selvage of the cloth, so as to call attention to it later, or, if possible, remedied at this point. From the table p, the cloth passes around the roll p_1, under the machine, then over and under the spreader

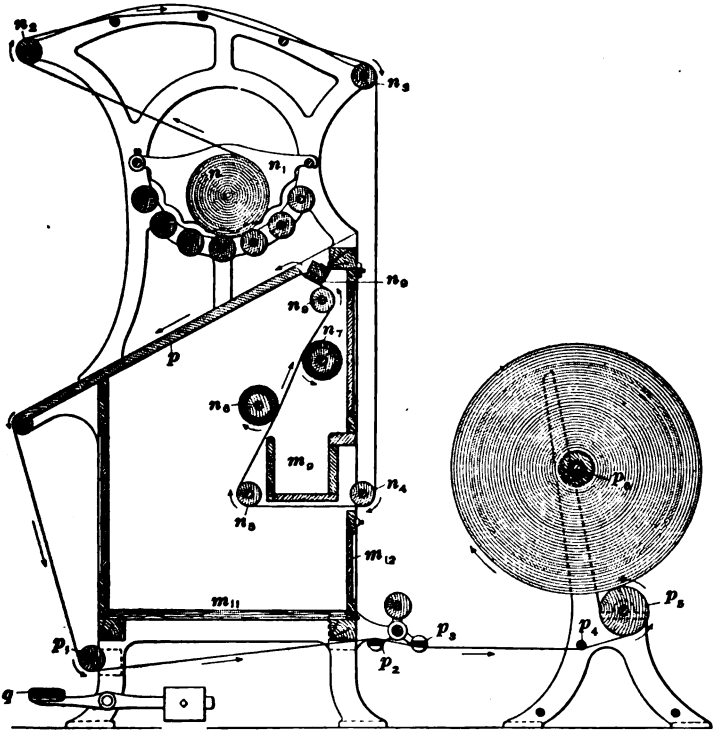

FIG. 2

bars p_3, p_3, respectively; these spread out the cloth so as to remove wrinkles, after which the cloth passes to the rolling head—under the rod p_4 and partly around the roll p_5—and is finally wound on the roll p_6. The outer surface of the roll p_5 is rough, thus enabling it to grip the cloth and draw it through the machine.

Digitized by Google

A flock box m_9 is provided with a door m_{10} (Fig. 1), by which the lint that falls from one side of the cloth may be removed. The lint from the other side falls into the space m_{11} and is removed through the door m_{12}. There are other doors in the casing by which the brushes may be reached. Threads should be picked off the brushes and lint removed from the box and enclosed space twice a day.

2. The **driving arrangement** of this machine is shown in Fig. 1. The driving belt is shipped from the loose to the tight pulley by means of the foot-board, or treadle, q. It is necessary, in order to keep the machine in operation, for the attendant to continually press down on this board, since a spring q_7 together with a weight at the inner end of the arm supporting the foot-board tend to bring it up and throw the belt from the tight to the loose pulley, thus stopping the machine. On the shaft with the tight and loose pulleys is a pulley q_1 that drives, by means of the belt q_2, the brushes n_6, n_7, Fig. 2. On this same shaft is another pulley that drives, by means of the belt q_3, a pulley q_4 loose on the shaft with the roll p_5. As the pulley q_4 is loose on the shaft, no motion will be imparted to the roll p_5 unless some other mechanism is brought into operation. This mechanism is as follows: The hub of the pulley q_4 forms one-half of a friction clutch, while the other half, which slides on a key on the shaft carrying the roll p_5, is controlled by an arm q_5 setscrewed to a rod q_6. When the belt is shipped from the loose to the tight pulley, by pressing down the foot-board q, the rod q_6 is turned in such a direction by the arm at its outer end and the mechanism connecting it to the foot-board as to throw the upper end of the arm q_5 toward the machine, thus connecting the two halves of the friction clutch and causing the pulley q_4 to revolve the roll p_5. If some such arrangement as this were not adopted, the momentum of the machine would cause the roll p_5 to continue to revolve for a certain length of time after the belt was shipped from the tight to the loose pulley. Since, however, in case a defect is noticed in the cloth as it is passing over the inspecting

Digitized by Google

board p, it is desired to stop the cloth instantly, the friction arrangement is adopted, which allows the pulley q, to revolve without affecting the roll p, in case the two halves of the friction clutch are not connected.

When the operator desires to reexamine any of the cloth that has passed forwards or to return the cloth so as to rectify some fault that has been noticed, the foot-board is allowed to rise, which disconnects the rolling head from the driving power and allows the cloth to be easily pulled back. Some trimming machines are constructed with a reversing motion by which the operator allows the main foot-board to rise and then, by pressing down a foot-board at the side, causes the cloth to pass through the machine in the opposite direction to that in which it usually travels. The brushes do not revolve while the cloth is running in the reverse direction.

3. As it is usually desired to remove the cloth from the trimmer in a large roll, it is necessary to connect the tail-end of each piece of cloth that is passed through the machine with the end of the new piece in the cradle. This is done by sewing the ends of the pieces together by hand.

4. A machine of the type described, when constructed to take 40-inch cloth, occupies a space of 5 feet 6 inches in width and 6 feet 6 inches in depth from front to back. The driving pulleys are 12 inches in diameter with a 2-inch face and when operated continuously at 300 revolutions per minute cause about 50 yards of cloth to pass over the inspecting table per minute. This is a somewhat excessive speed for inspecting, hence these machines are more commonly operated at speeds of from 200 to 240 revolutions per minute. These latter speeds cause from 33 to 40 yards of cloth to pass over the inspecting table per minute.

The trimming machine, although provided with an inspecting arrangement, is not used for the inspection of every style of cloth made in a mill, since some styles require a more careful inspection; in such cases the trimming machine is used merely for the purpose of lightly brushing the fabric, and the cloth is inspected after it has passed the cloth folder.

Digitized by Google

In still other cases, the trimming-and-inspecting machine is used for inspection only, the brushes being dispensed with. This is especially the case with certain fancy fabrics, where the brushing would disarrange the floating ends on the face of the cloth and destroy the fancy effect desired.

FOLDING AND MEASURING

CLOTH FOLDER

5. After the cloth has been treated either by the shearing-and-brushing machine or by the brushing-and-inspecting machine, it is usually folded on a machine known as a **cloth folder.** A view of this machine is shown in Fig. 3, while a section through the machine is shown in Fig. 4. The roll of cloth r, Fig. 4, is placed in the stands r_1 and the end passed between the rolls r_2, r_3, from which it falls into a curved zinc apron r_4. The rolls r_2, r_3 draw the fabric from the roll of cloth r at a speed substantially equal to that at which the cloth is folded. Since, however, the folding operation must necessarily be intermittent in its action, a surplus of cloth is drawn from the roll r and deposited in the apron r_4 before the machine is started in actual operation. This accumulation is used to compensate for the irregularity between the rotary motion of the rolls r_2, r_3 and the intermittent action of the folding mechanism. The zinc apron r_4 also serves to keep the cloth from coming in contact with the floor. From the apron r_4, the cloth passes in front of the guide roll r_5 and over the guide rod r_6, from which it passes between a board r_7 and a friction bag r_8. The cloth then passes forwards and under a friction board r_9 and over a friction board s, between the guides s_1, Figs. 3 and 4, and thence around a roll s_2 to the folding blades s_3, by means of which it is folded on a table t. The folding blades consist of a frame made of two blades held in end pieces s_{10}, each of which has a projecting stud that is supported by a rod s_4 on each side of the machine. These folding blades are operated, as will be explained later, by a rod s_5 on each side of

Digitized by Google

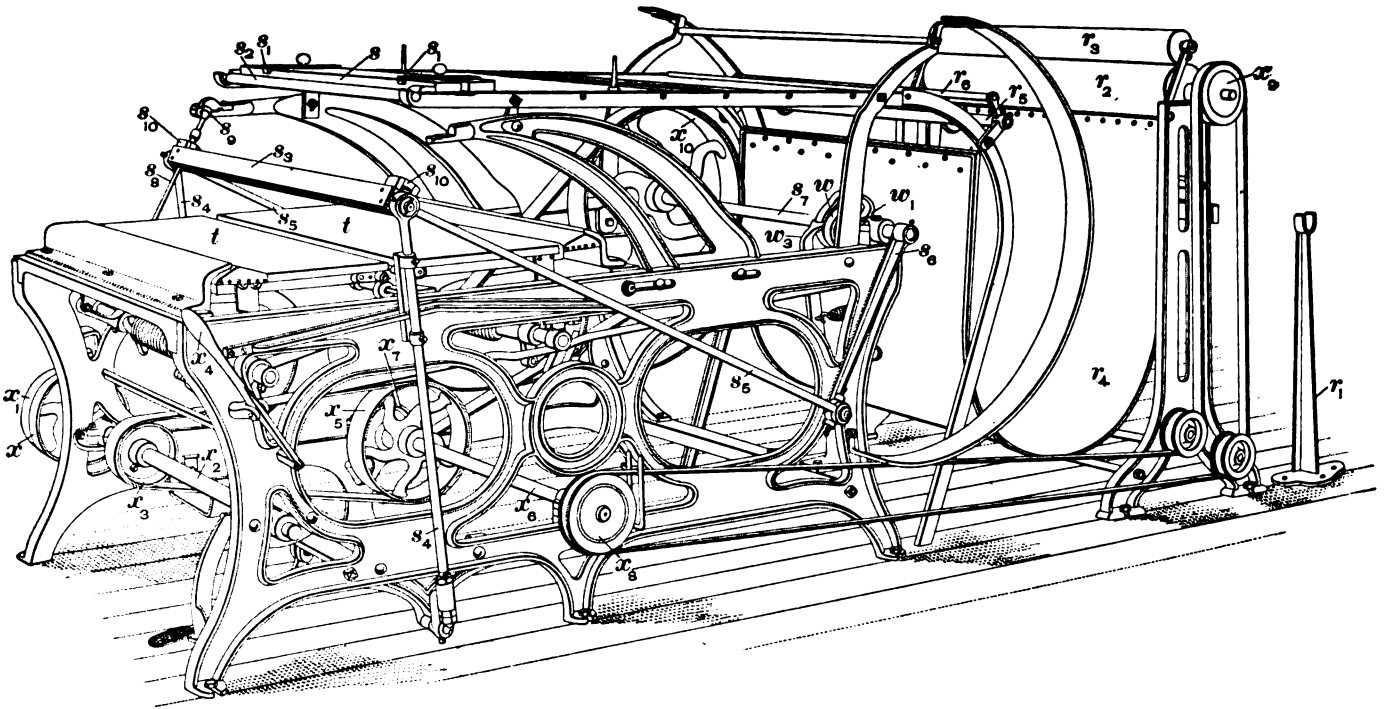

FIG. 3

Digitized by Google

the machine connected to a crank-arm s_6 that is fast to a shaft s_7. The position of the folding blades relative to the gripping jaws t_1, t_2 is controlled by a rod s_8, the upper end of which is held in a swivel-joint s_9, while its lower end projects and slides through a self-oiling bearing that is on the end of one of the end pieces s_{10} of the folding blades. As the folding blades are moved back and forth over the table t, they consequently assume the position shown by the full lines in Fig. 4 when at the back of the table and the position shown by the dotted lines when approaching the front of the table, the faces of the two blades being always at right angles to the swivel rod s_8. Fig. 5 shows the blades occupying the extreme backward position and placing the cloth under the jaw t_2.

6. In order to hold the cloth firmly in position as it is folded, the table t (see Fig. 5) is pressed against the jaws t_1, t_2; but in order to allow the folding blades to place each fold of cloth between the jaws and the table, an arrangement is provided to drop, alternately, the latter slightly at each end as the folding blades are placing the cloth between that end and its respective jaw. This table consists of two separate leaves hinged at the center, each leaf acting independently of the other as regards its holding the cloth against its respective jaw. In Fig. 4, the leaves of the table t are shown lowered so as not to be in contact with the jaws t_1, t_2, as will be explained later. The forward end of the table is supported by an arm t_3, Fig. 5, that is connected to a casting t_4 setscrewed to a shaft y. Forming a part of the casting t_4 is a ratchet t_5 that is protected, with the exception of a few teeth at its lower edge, by means of a shield t_6. Pressed against the shield by means of a spring not shown in the illustration is a pawl u attached to an elbow lever formed by the arms u_1, u_2. This lever is loose on the shaft y and is controlled by a rod u_3 attached to a lever w_3 that is in contact with the face of the cam w. A spring v that is on the shaft y has one end attached to a casting v_1 loose on the shaft, while its other end is attached to a casting v_2 setscrewed to the

Digitized by Google

Digitized by Google

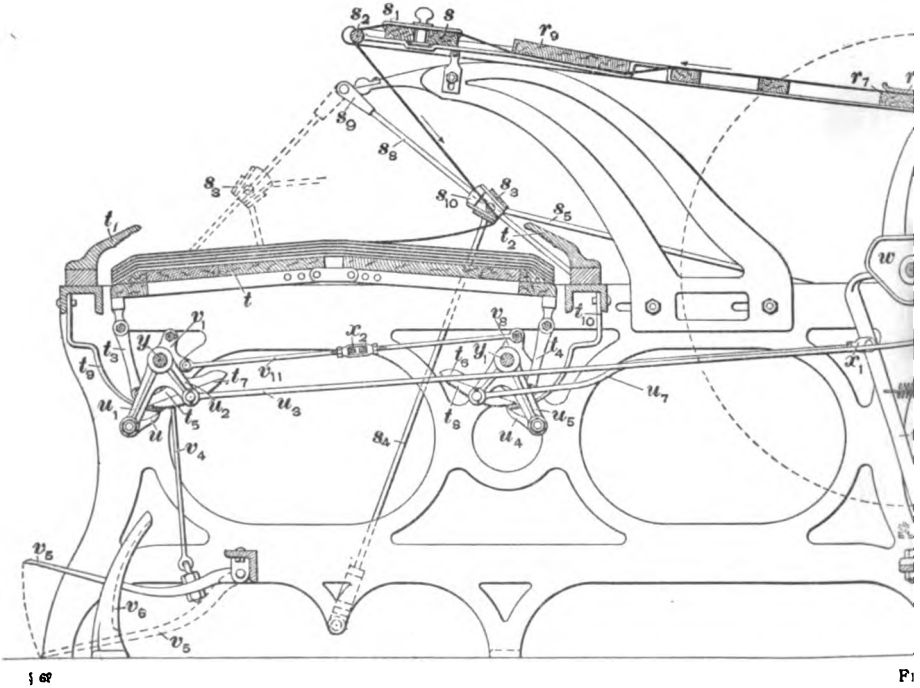

Digitized by Google

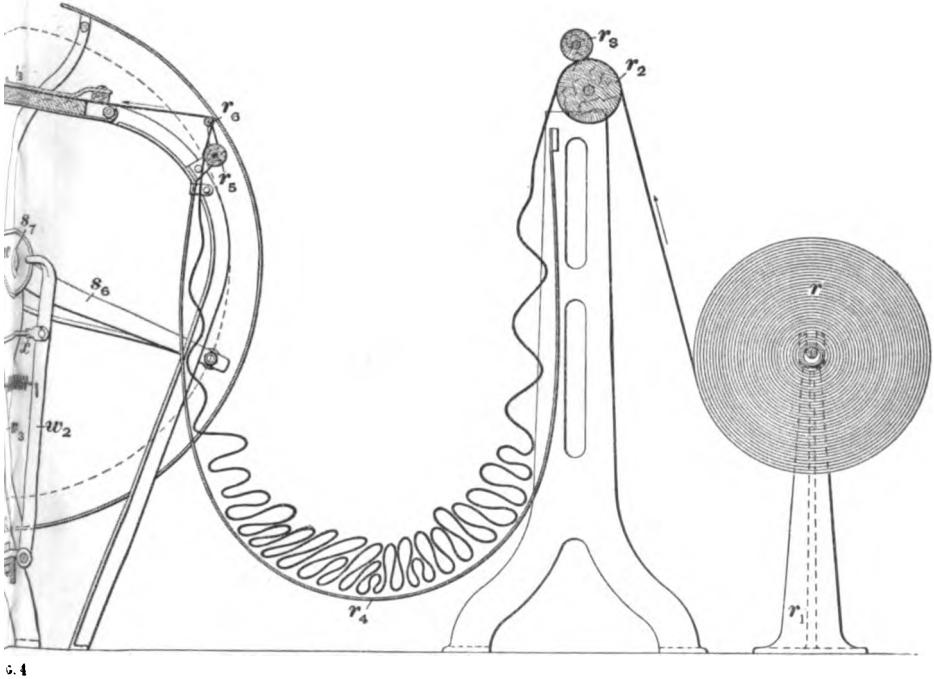

G. 4

Digitized by Google

Digitized by Google

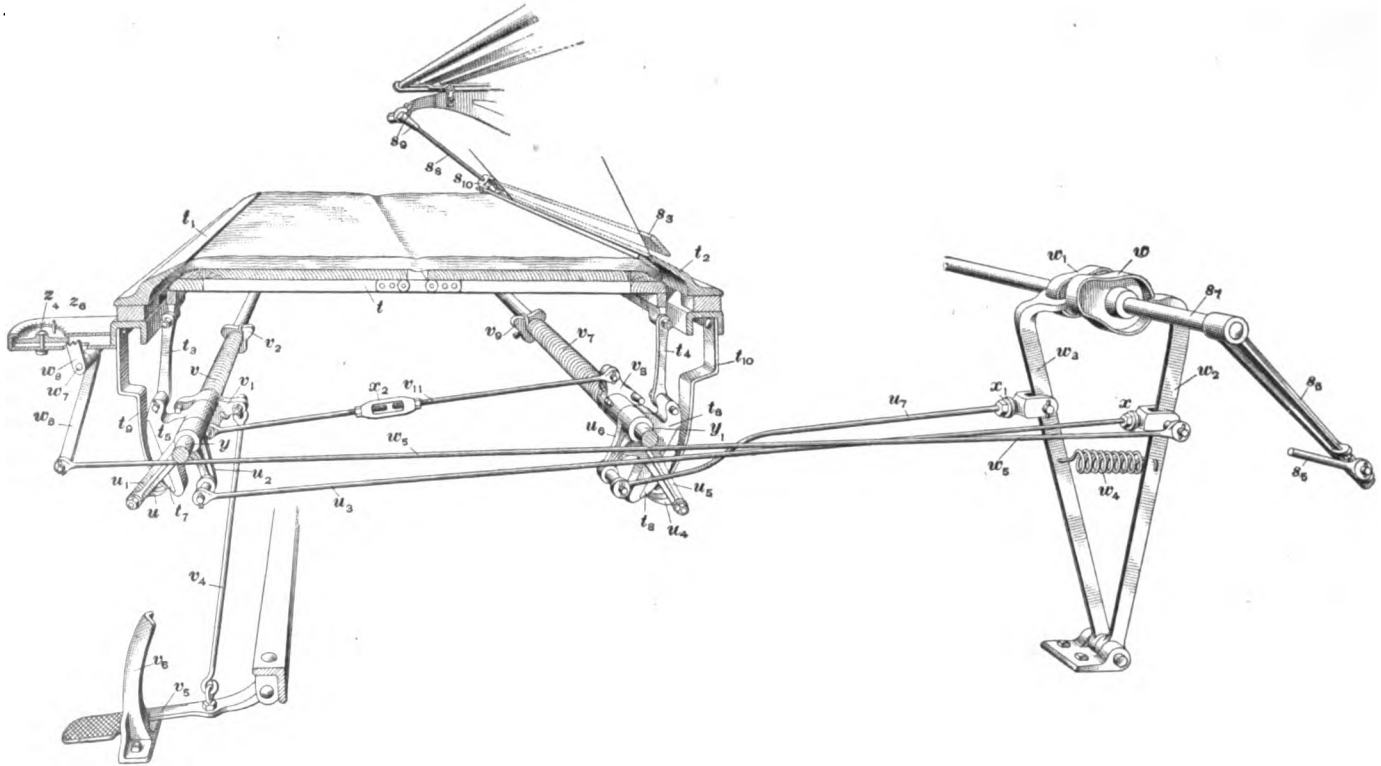

FIG. 5

Digitized by Google

shaft. These parts are duplicated at the rear end of the table. The casting v_1 is controlled by a rod v_4 attached to a foot-lever v_5.

The operation of these parts is as follows: In order to place the table t in position for operating the machine, the folding blades s_3 are first brought over the center of the table and the foot-lever v_5 pressed down until it is held by a catch in the casting v_6. Pressing down on the lever v_5 draws down the rod v_4, together with one end of the casting v_1, which compresses the spring v and turns the casting v_2. Since the casting v_2 is setscrewed to the shaft y, any motion of the former will be imparted to the latter and, in turn, to the casting t_3, which is also setscrewed to the shaft; consequently, as the foot-lever v_5 is pressed down, the casting t_3 will be moved up, which will push the forward end of the table t against the jaw t_1. A similar arrangement operates the rear of the table, the motion of the casting v_1 being imparted to a similar casting v_3 through the rod v_{11}, which results in the casting t_4 being moved up and pushing the rear end of the table against the jaw t_2. When the folding blades are in the center of the table both the pawls u, u_4 are up on their shields, thus permitting the table to be raised; if the pawls were in contact with their ratchets, the castings t_3, t_4 and, consequently, the table could not be raised. The shields t_9, t_{10} are so adjusted as to allow their respective pawls u, u_4 to engage just the required number of teeth in the ratchets t_7, t_8 as will operate the leaves of the table so that they will lower sufficiently to allow the cloth to be passed under the jaws t_1, t_2.

The cam w is so set on the shaft s_7 that when the folding blades s_3 are at the forward end of the table, that part of the cam farthest from its center will be in contact with the lever w_{11}, thus forcing it to the rear. This action draws the rod u_3 to the rear, together with the pawl u, which will engage with the ratchet t_7 and force down the casting t_3, thus dropping the forward end of the table t away from the jaw t_1 and allowing the folding blades s_3 to insert the cloth between these two parts. When the folding blades are

Digitized by Google

removed from the opening formed between the front of the table t and the jaw t_1, the cam w on the shaft s_7 revolves sufficiently so that the lever w_2, together with the rod u_2, return to their normal positions. This action allows the spring v, which has been placed under additional tension by the downward motion of the casting t_2, to be released slightly, thus turning the shaft y and raising the forward end of the table t into contact with the jaw t_1 so as to hold the cloth firmly in position. As the rod u_2 is moved to the front, the pawl u slides up on the shield t_6, thus leaving the ratchet t_7 and casting t_2 under the control of the spring v. The pawl is thus in position to operate the ratchet t_7 as the cam w continues to revolve and the folding blades move forwards again to place the cloth under the jaw t_1.

A similar connection is made to the rear end of the table by means of the arm t_4 that is connected to the casting t_5; this casting is setscrewed to the shaft y_1, which carries a spring v_7. The elbow lever u_5, u_6 that controls the pawl u_4 is operated by a rod u_7 attached to the lever w_3 that is in contact with the cam w_1 on the shaft s_7. The springs v, v_7 through their respective connnecting-rods tend to keep the levers w_2, w_3 in contact with their respective cams, but in addition a supplementary spring w_4 is provided. When sufficient cloth has been folded and it is desired to remove it from the table t, the foot-lever v_6 is raised to the position shown by the full lines in Fig. 4. This allows the springs v, v_7, Fig. 5, to turn the pieces v_1, v_6 in such a direction that the pins shown in these pieces hold down the castings t_5, t_6, thus holding both ends of the table away from the jaws t_1, t_2 and allowing the folded cut to be readily removed.

7. The **driving** of this machine is shown in Fig. 3. The shaft x_2 carries tight and loose pulleys x, x_1 that are driven by a belt controlled by the shipper handle x_4. The shaft x_2 also carries a pulley x_3 that drives, by means of a belt, a pulley x_6 on the shaft x_5, which also carries a pulley x_c. The pulley x_c drives the pulley x_8 on the end of the roll r_2, which drives the roll r_3 by friction. Another pulley x_7,

Digitized by Google

is setscrewed to the shaft x_8, behind the pulley x_9; by means of a belt, the pulley x_7 drives the pulley x_{10} on the shaft s, that carries the cams w, w_1.

8. In some cases, other types of tables are used that differ somewhat from the one previously described. One of these types is known as the *automatic drop-center table*, while another is known as the *solid*, or *one-piece*, *table*. The automatic drop-center table resembles very closely in general construction the table described in connection with Figs. 3, 4, and 5, but the table is so arranged that its center lowers proportionately with the ends as the pile of cloth gradually increases. This type of table is used for a large variety of fabrics and is especially adapted for extra-heavy or coarse goods; it produces folds of even length, an object that is difficult of attainment in the case of heavy goods or when long lengths of cloth are folded.

The solid, or one-piece, table, although not hinged in the center, is operated in a manner similar to the others as regards the lowering of its ends for the insertion of the cloth under the gripping jaws, and is used principally for silks or extra-fine goods.

9. The folder described is equipped with a low back frame and apron, while another type, which is similar as far as the actual machine is concerned, is equipped with a high front frame. The first type is used principally for unfinished goods, although in some cases it is used for finished goods. The second type is used largely for bleached, filled, or starched goods, prints, ginghams, and other finished goods.

The high front frame does not require the use of the zinc apron and the stands at the back of the folder, thus differing from the machine previously described. In this case, a frame supporting rolls similar to r_2, r_3, Fig. 3, is placed in front of the folder so that sufficient space is left for the operator. The cloth passes from the cloth roll, which is supported by small stands, between rolls similar to r_2, r_3, and then down around a drop roll, up over another roll, over suitable guides to a roll similar to s, and thence to the folding

Digitized by Google

blades of the machine. The drop-roll arrangement takes the place of the apron of the first type.

10. Measuring Motion.—In many mills, it is the custom for the operator of the cloth folder to count the folds laid on the table, when the machine does not run too fast for this to be done. He thus ascertains the length of each cut. In other mills, measuring motions are used, which indicate on a dial the number of folds or yards of cloth in each cut. A common type of measuring motion is shown at the front of the machine in Fig. 5 and in detail in Fig. 6.

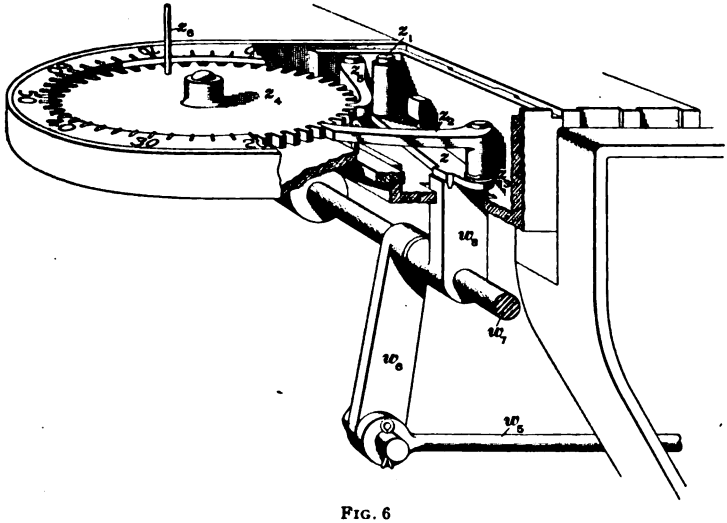

FIG. 6

Attached to the lever w_2, which is actuated by the cam w, is a rod w_3 that is connected at the front end to the bottom of an arm w_4 attached to the shaft w_5. The cam w is so set that each time the folding blades approach the front of the machine, this cam presses the upper part of the lever w_2 backwards, thus drawing the lower end of the arm w_4 backwards. As the shaft s_1 continues to revolve, the lever w_2 is drawn forwards by the spring w_1, and the lower end of the arm w_4 pushed forwards. Thus, the arm w_4 makes a forward or backward movement each time that one layer

Digitized by Google

of cloth is placed on the table, and imparts a reciprocating motion to the vertical arm w_6, which is attached to the shaft w_7. A horizontal arm z mounted on a stud z_1 carries at its opposite end a pawl z_2 also mounted on a stud. The upper end of the arm w_6 is connected to the under side of the arm z by means of teeth and gives an oscillating motion to the end of z that carries the pawl z_2. A spiral spring z_3 serves to keep the pawl constantly pressed against the teeth of a ratchet gear z_4, the various parts being so proportioned as to cause the movement of one tooth to be imparted to this ratchet each time that the folder blades make their forward movement. While the folder blades are moving backwards, the pawl z_2 is being drawn backwards to mesh with the next tooth on the ratchet, a second pawl z_5 holding the ratchet in place until z_2 assumes the new position.

The cover of the measuring motion is so constructed as to form a circular plate, or dial, which is divided into fifty spaces to correspond with the number of teeth on the ratchet. These spaces, each of which counts two, are numbered from 10 to 100, and as the ratchet carries a pin z_6, the number of folds is thereby indicated. For example, if the ratchet is set so that the pin stands against 100, which is really *0*, on the cover and the folding blades make twenty-five backward and twenty-five forward movements, the ratchet will have revolved a distance equal to twenty-five teeth, while the pin will have been carried opposite the point marked *50* on the cover, indicating that fifty folds have been made. In case the folding machine is so constructed and set that each fold consists of 1 yard, the length of cloth folded will be 50 yards.

11. The usual length of each fold of cloth is 1 yard, but folders may be constructed to make folds of $1\frac{1}{4}$ yards, of $1\frac{1}{2}$ yards, or of 1 meter. This generally requires a different machine, although some machines are so constructed that they may be adjusted to give different lengths; for example, from 1 yard to $1\frac{1}{4}$ yards or from $1\frac{1}{4}$ yards to $1\frac{1}{2}$ yards.

Digitized by Google

In the case of a 1-yard fold the exact length given by the mill varies from $35\frac{1}{2}$ to $36\frac{1}{2}$ inches, according to the policy of the management. In cloth rooms where the fabric is under tension during almost its entire treatment, as, for instance, where it is sewed and rolled, sheared, brushed, and rolled again, it is slightly stretched, and after being folded in loose cuts tends to contract. In such cases, it is often folded slightly more than 36 inches for each so-called yard, and thus controversies with purchasers are avoided.

12. Little need be said concerning the operation and care of a cloth folder, since all parts are readily accessible and easily set. The stands at the back of the machine in which the roll of cloth rests should be so placed as to bring the roll in the center of, and perfectly parallel with, the machine, so as to prevent the cloth passing to the rolls at an angle. Care should be taken to have sufficient cloth in the apron r_4, Fig. 4, so that the folding blades will take the cloth from it and not from the rolls r_2, r_3. If the cloth slips between the rolls r_2, r_3 and they do not therefore deliver the cloth fast enough to keep sufficient cloth in the apron, a weight can be attached to each end of the roll r_3, which increases the friction between the two rolls and prevents this slippage. If the two rolls take in too much cloth for the folder to take care of, the speed of r_3 should be reduced by changing the drive.

The friction placed on the cloth by the bag r_6 and friction board r_6 should also be carefully watched, in order to prevent the cloth being too tight between the roll s_2 and folding blades s_3. If the friction on the cloth is too great, it will be drawn very tight between the folding blades and the roll s_2, Fig. 4, which will sometimes cause the folding blades to pull the cloth out from under the jaws t_1 or t_2 when folding; or perhaps the fold may not be pulled completely out of the jaw, but may be started sufficiently to make the length of the folds uneven. If, on the other hand, there is too little friction on the cloth, it will be very loose and will flap considerably in being folded. This will often result in the cloth

Digitized by Google

sliding ahead of the blades when they stop under the jaws t_1 or t_2, which will also have the effect of making the length of the folds uneven. The friction can be adjusted by increasing or decreasing the pressure of the friction bag on the cloth. The friction can be increased by folding a piece of cloth of the required weight so that it can be inserted in the friction bag, which is practically a flattened tube of cloth so supported that its under surface comes in contact with the cloth as it passes over the board r_1, Fig. 4. The lower edges of the folding blades should always be kept perfectly clean, especially when heavily sized goods are being folded, in which case the folding blades are very liable to become dirty and sticky, and the cloth clinging to them will result in the folds being dragged back.

The length of the fold that is being made by the folding blades should be measured frequently, in order to make sure that it is correct. If the cranks that impart motion to the folding blades need adjusting, this may be done by means of nuts and setscrews on the crankpins. Care, however, should always be taken that the cranks on both sides of the machine are set exactly the same length.

13. Care should also be taken to see that the bushings at the ends of the folder blades are not too loose, and if it is found that this is the case, the play can be taken up by means of setscrews provided for that purpose. Sometimes it will be found that the pawls u, u_1, Figs. 4 and 5, have become so worn by use that they will not properly engage the teeth of the ratchets t_1, t_2. In this case the points of the pawls may be sharpened so that they will properly engage with the teeth of the ratchets, or if the pawls are greatly worn, new ones may be put on. When the teeth of the ratchets become worn or broken, it is usually inadvisable to attempt to repair them by filing or other means; it is far better to put in new ratchets. The folder blades should be so adjusted that there is the same distance between the bottom folder blade and the under side of the jaws t_1, t_2 when the folder blades are in their forward and in their backward

Digitized by Google

positions. When the folder blades are at the limit of their movements in either direction, the edge of the jaw t_1 or t_2, as the case may be, should be in line with, or perhaps a little back of, the top edge of the folder blades.

The rods u_2, u_3, Fig. 5, should be so adjusted that the fron and rear ends of the table are lowered at the proper time. This is accomplished by the adjustments at x, x_1 provided for this purpose. These rods, together with the cams w, w_1, should be so adjusted that the table closes immediately on the withdrawal of the blades from under the jaws. The casting v_1 is connected to the casting v_2 by the connecting-rod v_{11}, which is provided with a turnbuckle x_2, so that both ends of the table can be made to act in harmony by turning the turnbuckle to the proper position.

In case the cloth is pulled out from beneath the jaws t_1, t_2 when the machine is in operation, if there is not too much friction on the cloth it is probable that the springs v, v_3, Fig. 5, need tightening. These springs, however, should not be tightened so that the pressure of the table on the jaws t_1, t_2 is any greater than is absolutely necessary. Usually the pressure of these springs can be tested by pushing down on the cloth table, and it will generally be found that a fairly strong pressure with the hands is necessary to force the table down against their tension. If lint collects on the ends of the table after the machine has been operated for some time, the table should be carefully cleaned; and it may be that the duck covering at the ends of the table is worn smooth and thin, in which case a new covering of duck or other heavy cloth should be placed on them. The slipping or improper gripping of the cloth at the jaws is also caused by the beveled portions of the ends of the table being warped or worn excessively. This can be tested by inserting a piece of paper at intervals throughout the entire length of the jaws; the paper should be gripped between the jaws and the ends of the table. These last two faults are the most common.

The speed of a cloth folder is spoken of as so many yards per minute; that is, while the machine is actually running it is folding that number of yards per minute. The total

Digitized by Google

number of working minutes per day, however, could not be multiplied by the yards per minute in order to obtain the production of the machine, since a large portion of the operator's time is consumed in separating and removing the cuts as they are folded.

14. Cloth folders that fold the cloth in folds 1 yard long are constructed with the tight and loose pulleys x, x_1, Fig. 3, 10 inches in diameter, and when running 250 revolutions per minute will fold 75 yards of cloth a minute, which is a fair average speed for folding ordinary fabrics. A machine of this description occupies a floor space of about $5\frac{1}{2}$ feet by 10 feet. Cloth folders that are so constructed as to fold the cloth in folds $1\frac{1}{4}$ yards in length also have driving pulleys 10 inches in diameter that, when running 200 revolutions per minute, will cause the machine to fold 75 yards of cloth per minute. On some fabrics a cloth folder, if operated by a skilled operator, may be run at a faster speed than that given above, but on the other hand it will be found that where goods are very wide or are very light and delicate, the speed of the machine should be correspondingly reduced. In setting up a cloth folder it is very important that the machine should be set perfectly level. This may be ascertained by placing a level on the front girt of the machine and also on the cam-shaft s_1, Fig. 3.

The cloth, as it comes from the shearing-and-brushing machines and is carried to the folder, is in the form of a large roll, containing a number of cuts stitched together. However, as the cloth is folded at the front of this last machine, the operator watches closely as it passes through, and as each cut is folded, detaches it from the rest of the cloth. Thus, there will be only a cut of about 50 yards in each separate piece of cloth that is taken from the folder. In some mills it is the custom to leave the cloth in double cuts, each separate piece in this case being about 100 yards in length.

Digitized by Google

MEASURING ATTACHMENTS

15. Cotton cloth when intended for shipment in bales of either single or double cuts is usually measured at the cloth folder, as already described; but when it is to be shipped in a roll, it is usually measured at the rolling head of the last machine through which it passes before being ready for shipment, or at the calender-rolling attachment, if it passes through this process. It is possible, however, to apply measuring rolls and dials to almost any machine through which the cloth passes, as these are constructed in various sizes and styles, with suitable brackets for attaching them, either to the sides or tops of machine frames or to horizontal rails or upright posts.

The usual arrangement consists of a worm on the end of the measuring roll, driving a dial gear, the length run being indicated by a pointer, or finger. When cloth is handled in short lengths, a single dial is used, to register up to 60, 75, or 100 yards. For large rolls, double dials are used to register a maximum of either 2,600 or 5,100 yards, while for recording very much greater lengths, such as the total amount of cloth passed through a machine in a week, counters that will register up to 100,000 yards are applied. The gearing between the measuring roll and the finger on the dial is selected so that as a point on the circumference of the measuring roll travels 36 inches, the finger moves over a space indicating 1 yard on the dial.

STAMPING

16. **Stamping** is the operation of impressing on the outside of a cut of cloth a combination of marks to give information as to the name of the mill where the goods was woven, the name of the cloth, the weight and length of the cut, and frequently a trade mark, etc. The imprint is usually arranged so as to be long and narrow—not more than 15 inches in width and from 20 inches upwards in length, according to the style of the design and the information to

Digitized by Google

be given. It is usually stamped on one-half of the outside fold of the cut; that is, the cut of cloth after leaving the folding machine in 36-inch folds is doubled once so as to reduce the width to 18 inches, and the imprint stamped on one of these halves. In some cases, more particularly where a 45-inch fold is used, one-third of the width is turned inwards on each side, thus reducing the width of the fold to 15 inches, and the impression is then made on the central portion, at the back of the cut. Usually blue ink is used to make the impression, but black, red, and other colors are sometimes used.

The stamps by which the impressions are made consist, in some cases, of wooden blocks with the design or letters that are to be imprinted cut in relief. More commonly, however, they consist of smooth blocks of hardwood into which have been driven the letters or portions of the design previously formed out of strips of copper, the edge of the strip forming the outline of the design desired. The portion of the stamp that indicates the number of yards is usually separate from the remainder, as the length of the cuts is not always the same, thus necessitating a separate series of stamps, the proper ones being selected for each piece. The remainder of the imprint may be in one or more pieces, preferably in two or three; for instance, the name of the mill on one, the trade mark on another, and the weight per yard on a third.

Stamping is performed either by hand, in the case of a small mill, or by machine, in the case of a large mill. A stamping machine operated by power will stamp the product of three thousand looms and is somewhat expensive; consequently, it is not usually introduced in mills with less than five hundred looms running on goods that have to be stamped.

17. The **inking arrangement** is somewhat similar whether for hand or power; it consists of a copper box either filled with water and having a rubber covering or containing a rubber pad filled with water. This is for the purpose of providing a surface that yields to the slight inequalities in the surface of the stamp and affords a means of equalizing

Digitized by Google

the supply of ink. The surface of the rubber is covered with soft cloth or flannel in the case of hand stamping, to which the ink is applied by means of a brush. In the case of machine stamping, the pad is covered by an endless apron, which travels over the surface of the pad and conveys the supply of ink. When goods are stamped by hand, the impression is made just as with an ordinary rubber stamp for making an impression on paper, namely, by first pressing the stamp on the inked surface and then on the cloth, this being continued with different stamps until the design desired is impressed.

18. Stamping Machines.—The machine for stamping consists of a substantial framework to support the various mechanisms required. Vertical rods that slide in suitable guides carry a cross-bar to which are attached as many stamps as are required to complete the design, the arrangement being such that the cross-bar may be adjusted at either end to give a uniform impression. The rods supporting this arrangement are actuated by cams, which raise and lower the cross-bar, and when the latter is dropped into position, another cam produces the desired pressure to make the imprint. A sliding table moves forwards to receive the piece of cloth to be stamped, which is laid on the table in any desired position, determined by adjustable sides; the table then travels backwards until it is in position under the stamps and remains there a sufficient length of time to allow the impression to be made and the stamps to be returned. The table then moves forwards again to admit of the removal of this piece of cloth and the insertion of another piece, during which interval the stamps have again moved downwards, but this time into contact with the stamp pad, so as to receive another supply of ink in readiness for stamping the next piece of cloth.

Stamping machines carry tight and loose driving pulleys 18 inches in diameter and $2\frac{3}{4}$ inches wide, revolving at a speed of about 40 revolutions per minute. The space occupied by such a machine is about 6 feet $\times$ 5 feet.

Digitized by Google

If all the cuts are exactly equal in length, which seldom occurs, the mark to indicate the number of yards in the cut can be impressed at the same time as the other parts of the design; but it is more common to stamp these afterwards by hand, since there is usually a slight variation in the length of the different cuts, so that it may be necessary to stamp one length as 49 yards, the next as 49½, a third as 48, a fourth as 50, etc.

PREPARATION FOR SHIPMENT

BALING

19. To prepare cloth for shipment it is either baled or cased, usually the former. Baling differs according to whether the goods are intended for domestic or foreign shipment, being much more carefully performed in the latter case. When cloth is to be shipped from the mill to the bleacher, converter, or the domestic consumer, a number of cuts (varying according to their length and weight and the size of bale desired) are taken from the compartment in which they are stored in the cloth room, the number of yards and weight of each cut being entered in a book or on a sheet of paper. Each cut is folded one or more times, to reduce its width to the desired size, when it is ready for baling.

20. Baling Presses.—Three types of baling presses are used for cloth intended for domestic shipment—the **togglejoint press**, the **screw press**, and the **hydraulic press**. Screw presses are not now usually adopted, owing to their slow action, and hydraulic presses are expensive and usually too powerful for domestic baling; the togglejoint press is therefore most commonly installed in cotton cloth rooms for this purpose. Fig. 7 is a perspective view of a togglejoint press. The framework of the press is composed of the bed *b*, on the upper surface *a* of which the bale is formed, and the head *c*, both of which may be made of either cast iron or wood. The upright rods, or columns, *d*

Digitized by Google

are usually made of steel and serve to connect the bed *b* with the head *c*. Running horizontally across the machine below the head and between the columns is the screw *e*, which imparts motion to the working arms f, f_1, f_2, f_3. This screw has a right- and left-hand thread and carries two

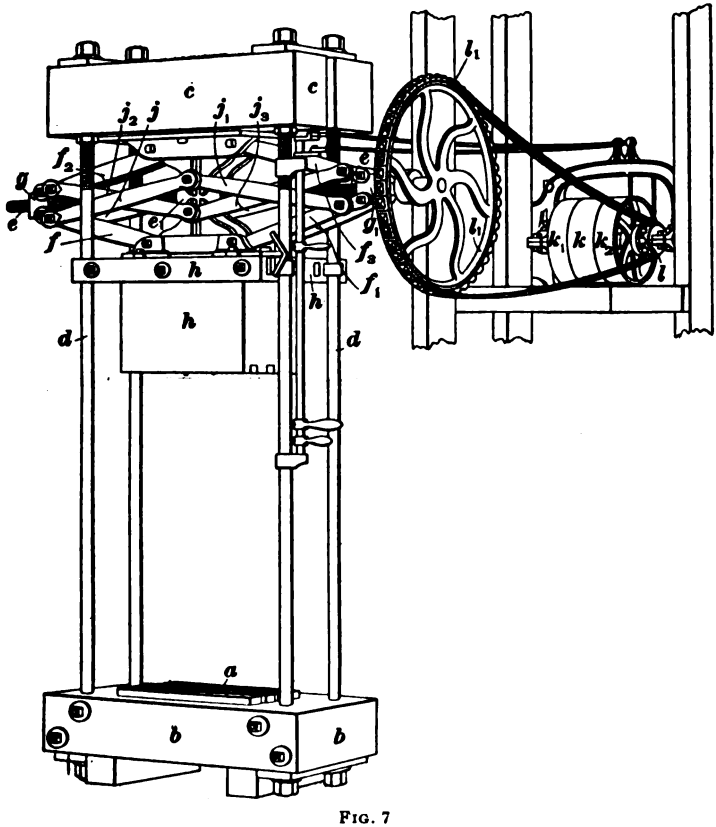

FIG. 7

nuts g, g_1. The arms f, f_2 are pivoted at one end to the nut *g*, while their other ends are connected, respectively, to the follower *h* and to a bracket attached to the head. The arms f_1, f_3 are similarly connected on the other side of the head. By this means, when the screw *e* is turned in one direction, it will draw the nuts toward the center of the

Digitized by Google

screw, straighten out the working arms, and force down the follower *h*. When the screw is turned in the opposite direction, it will draw the nuts out, cause the arms to fold up, and thus raise the follower. The arms j, j_1, j_2, j_3 serve merely to steady the working parts. The bed and follower are constructed with recesses through which cords may be passed while the cloth is under pressure, and secured before the pressure is released.

An automatic power attachment is used in connection with the press and consists of a bracket and short shaft containing three pulleys—*k*, which is attached to the shaft, and k_1, k_2, which are loose on the shaft. The bracket also carries two rods, with belt shippers, springs, and lever attachments for shipping the belts from one pulley to another. One loose pulley is driven by a crossed belt, while the other is driven by an open one and consequently revolves in the opposite direction. On the shaft with the pulleys is a small sprocket gear *l*, which drives, by means of a chain, a large sprocket gear l_1 on the same shaft as the screw *e*. In operation, one belt is first shipped to the tight pulley, which turns the screw in such a direction that the follower is forced downwards until the cloth has been compressed sufficiently, when the belt is automatically shipped to its loose pulley. After the bale has been secured with ropes or bands the other belt is shipped from its loose pulley to the tight pulley, which reverses the screw and raises the follower.

21. Before forming the bale of cloth, the required number of pieces of rope (if rope is to be used) of sufficient length to pass around the entire bale are placed in position in the grooves in the bed; it is becoming the practice now to use, instead of rope, steel bands cut to suitable lengths and secured by buckles. The method of passing these around the bale, however, is much the same in either case. After the ropes or bands have been properly placed in the grooves, a piece of burlap of sufficient size to cover the lower side of the bale and half of the surrounding four sides is placed in position on the top of the bed. The required number of

Digitized by Google

cuts of cloth are then placed on this burlap and covered with another piece of burlap similar to the first, after which the follower is allowed to descend and subject the cloth to the necessary pressure to produce a bale of the required size. The burlap is then drawn up from the bottom and down from the top so as to overlap and the edges are sewed together. The ropes or bands are next secured around the bale and the follower allowed to rise, after which the bale is removed and marked with the necessary shipping instructions and description of its contents, such as style, number, length, or other particulars. This marking is generally done by means of a stencil. If the bales are usually shipped to the same destination and they are usually marked with certain standard markings, it is customary to have these stencils made of brass plate, the letters being cut out. In those mills where the addresses to which shipments are to be made are constantly changing, stencil machines are being introduced which prepare paper stencils in a very short time. After the bales are completed they are trucked to the storehouse and held for shipment.

22. It is not customary to completely enclose the bale of goods in burlap, especially if it is to be transported a short distance, in which case it is common to use only a small strip of burlap for the bottom and another for the top, leaving the sides partly exposed. This is not a good practice, since bales of cloth are carelessly handled in transportation, and the exposed cloth may come in contact with the bottom of a car that is dirty or that has been used for oil, acids, or some other substance that has a detrimental effect on the fabric, or at any rate soils the edges of the folds. Similarly, bales become marked with grime and dirt when laid on wharves. As a result, when the cuts are opened, streaks of grime or dirt will frequently be found running across the cloth where it has been folded or along the selvages. These marks are known to the converters as *bale marks* and are very objectionable, as it is impossible in many cases to remove them in bleaching.

Digitized by Google

It is customary at the same time that the cuts are piled up in the press to make a record of the contents of the bale; that is, the style of the cloth, the number of cuts in the bale, the number of yards in each piece, the weight of each piece, the total number of yards, the total weight of cloth, and the average weight per yard, thus affording a means of ascertaining whether the cloth is being manufactured according to the weight per yard ordered.

23. Foreign Shipment.—When goods are to be shipped abroad, especially for long distances by ocean transit, the style of baling is somewhat different and much more completely and carefully performed. Bales for ocean shipment are pressed more closely than for domestic shipment, since ocean rates depend on the space occupied. The covering of the bales must be more elaborate, in order to resist moisture. Hydraulic presses are almost always used for baling cloth for ocean shipment, on account of the greater pressure that can be obtained. The bales are also much heavier than domestic ones, from 100 to 200 cuts being sometimes baled together; but this depends on the instructions of the foreign buyer, since in some cases small bales are made, to facilitate transportation to the interior of foreign countries.

The methods of covering foreign bales vary according to requirements, but one example will serve to illustrate all. On the bottom platform of the press a piece of burlap or coarse linen canvas is laid, and on the top of this, tarred cloth, which is canvas covered with pitch to make it waterproof. Above this, one or more layers of heavy gray or brown absorbent paper are laid, so as to prevent the pitch striking through to the cloth, and on this, thick white paper is placed. The cloth is then piled up to the required height and on the top paper and cloth are laid in reverse order, namely, white paper next to the fabric, then gray or brown absorbent paper, then the waterproof tarred cloth, and above it the outside covering of burlap. Sometimes additional sheets of oiled linen cloth are placed next the outer layer of paper, with still another layer of absorbent paper next the white

Digitized by Google

paper. The lower platform of the press is raised by hydraulic power and the ends of all the layers folded so that they will overlap and yet remain in their respective relative positions to the cloth. The outer coverings are sewed up at the sides and ends, after which four or more steel bands, usually painted to prevent corrosion, are secured around the bale and fastened by rivets, after which the pressure is released, the bale removed, and the necessary shipping marks placed on with stencils, together with the customary injunction, "Use no hooks."

SHIPMENT IN ROLLS OR CASES

24. It is becoming more and more customary to ship ordinary cotton cloth from the mill to the converter in rolls, just as it leaves the shearing-and-brushing machine, or, where it is not required to be sheared and brushed, as it leaves the sewing-and-rolling machine; that is, after the wooden roll on which the cloth is wound at these machines is removed. In this case a piece of burlap is placed around the roll and sewed where the ends overlap. The roll is then placed on its end and a small piece of burlap tucked in the upper end and sewed around the end of the roll along the edge of the selvage of the piece of burlap previously placed around the roll of cloth. The roll is then stood on this end and the opposite end covered in the same way, thus completely enclosing the cloth.

25. Another method of shipment is to pack the cuts of cloth in cases. This is common for ginghams and those fabrics that leave the mill in the condition in which they are forwarded to the dry-goods commission houses, ready for the dry-goods store. The cases are constructed to hold the required number of bolts of cloth and are lined with paper. After the cuts have been packed in the case, they are pressed down and the cover nailed on; the cases are then stenciled with the required shipping instructions, after which they are removed to the storehouse to await shipment.

Digitized by Google

CLOTH INSPECTION

26. The proper inspection of cotton cloth is one of the most important matters in connection with the operation of a cloth room. It is important to have every piece examined in order to detect faults and trace them to the weaver who has caused them or allowed them to pass. It is also a means of detecting faults in the cloth that cannot be attributed to the weaver, but to some other operative in the weaving department or in some other department; as, for example, wrong drafts in the drawing-in room, or unsuitably mixed cotton, or defective yarn produced in the spinning room. By the inspection of cloth the different cuts are also graded for shipment. Almost every mill divides the cuts into two grades—firsts and seconds—and some into three or more grades, depending on the strictness of the buyer's requirements or the reputation that the mill desires to maintain. In addition to the regular grades, the inspection also results in producing a certain number of remnants, or *mill ends*.

27. Among the principal faults to be watched for is that known as *ends out*, where the weaver has failed to replace a broken end or ends as soon as the breakage occurs. *Mis-picks* result when the loom, after having been stopped by the filling breaking or running out, has run for a pick or two before being entirely stopped and then the weaver in starting with fresh filling has allowed the first pick of the new filling to lie in the same shed as the last, thus giving two consecutive picks in the same shed; this trouble is accentuated in fancy or colored goods, where the additional defect of making a break in the pattern results. *Broken picks* result when a pick of filling breaks part way across the shed and is not removed so as to be replaced by a complete new pick. *Bad selvages* are due to various causes. *Smashes* are produced by the shuttle remaining in the shed and breaking out a portion of the warp yarn; these can be remedied, if not of serious proportions, by the weaver piecing up the warp and making a new start in such a way as to avoid evidence of there having

Digitized by Google

been a smash, although this is not always done. *Thin places* in the cloth may result from starting the loom improperly after a breakage in filling, or may be caused when the loom is running; *thick places* are also caused in a similar manner, there being too much filling in a given space in comparison with the remainder of the fabric. *Floats* occur where there has been an entanglement in the warp resulting in imperfect interweaving for a short distance filling-way and warp-way, thus producing a hole in the cloth or a thin place where it has been scratched over. Most of these defects are the fault of the weaver.

Slubs, or *slugs*, and *thick places* in the filling are due to defective yarn preparation, attributable to departments previous to the weaving department. An *insufficient* or an *excessive number of picks* per inch results when the wrong take-up gears are placed on the loom by the fixer or second hand; and many other defects of a similar nature occur that are not the fault of the weaver. The duty of the weave-room overseer, in a small mill where he is also the cloth inspector, is to call the attention of the proper officials to these faults, that they may deal with them in such a manner as will prevent or reduce the frequency of their occurrence and may also decide whether the cloth shall be considered as first quality or as seconds.

In case a defective length of cloth must be entirely cut out, it is customary in most mills merely to lay the two remaining pieces together and mark the cloth with the combined length of the two pieces, thus, $25 + 20 = 45$. This forms a *blind end*, and if shipped to the converter in this condition, this defect will not be discovered until the cloth is being run through some machine at a rapid rate, which will cause much loss of time in threading the cloth through the machine again and frequently the spoiling of a number of yards by the defective treatment of that portion of the cloth. The converter prefers that the two cut ends should be sewed together so as to make one continuous cut. Whenever it is necessary to sew two ends of cloth together for this or any other reason, it should always be done by

Digitized by Google

machine and not by hand, since hand-sewed seams in the gray cloth almost always break when they are subjected to the strain that is applied in certain converting machinery, thus causing entanglement and spoiling a considerable length of the fabric. Similarly, when in a piece of cloth a place that has been allowed to pass through the loom without having filling inserted is discovered, the two woven portions merely being connected by warp ends, this should be cut out and the ends sewed together. Since the warp alone is not sufficient to stand the strain of the converting processes the cloth would be broken or, in case of singeing, the ends would be burnt away, thus causing a break.

28. The cloth-room inspector should be trained to consider the requirements of the converter as far as possible, in order to obtain for the mill a good reputation for delivering cloth that causes little trouble in bleaching, dyeing, or printing. For example, the inside end of a piece of cloth should be left flat when the folds are doubled over for shipment and not allowed to crumple, as is often customary, since this causes wrinkles for ½ yard or more, which cannot easily be removed. The converters also appreciate a good selvage to a fabric, since defective selvages, by breaking, cause as much trouble as any other fault in cotton cloth, if not more. Many of the faults produced in weaving show up much worse after the cloth has been dyed or bleached.

The practice of placing pins or leaving needles in cloth should not be permitted; they should be looked for by the inspector and removed, as well as broken teeth of combs that have been used for scratching up defective places. Any such metallic substances damage the rolls of the converting machinery or adhere to their surfaces, thus producing a series of damaged places for a considerable distance.

No black lead (graphite) marks should be permitted, nor marks made by any material containing wax or grease, since such marks will not bleach out. Pure chalk crayons only should be used in any department for marking cotton goods, especially cloth that is to go to the converter.

Digitized by Google

29. The standard of quality for grading the cuts depends on the policy adopted by the mill and the requirements of the buyer, so that it is difficult to give any hard and fast rule for this. In general, it may be stated that where the requirements are fairly stringent and where cuts that contain any serious imperfections or any excessive number of minor imperfections are not classed as first quality, the number of seconds should not exceed 2 per cent. in a well-managed mill; it should be less than this for ordinary plain goods and not greatly in excess for fancy or colored goods. Some mills making both plain and fancy goods keep their seconds at less than $1\frac{1}{2}$ per cent. the year around.

30. Cloths may be inspected in the cloth room in three ways: (1) at the brushing-and-inspecting machine shown in Fig. 1; (2) by means of an inspecting machine of simpler construction, consisting of little more than a black slanting table over which the cloth is drawn by hand or by means of revolving rolls which can be readily stopped in case a defect is noticed; (3) fold by fold, after it has been removed from the cloth folder and laid on a flat table.

The most common and perhaps the most satisfactory system of inspection is the one last named. The piece of cloth as it is taken from the folder is doubled over on itself once and each fold turned over by hand, and any defects noted. After one side has been inspected, the piece is turned over end for end and the other half of each fold examined in the same way. This is a more expensive system than the first and second, but results in a more careful examination, and as the piece of cloth is stationary the minor defects can not only be observed but in some cases remedied. For a more careful inspection, the cloth is laid flat as it comes from the folder and an entire fold turned over each time. In the larger cloth rooms the inspection is usually performed by girls, who refer especially defective pieces to the superintendent of the cloth room for final inspection and action.

31. The appliances required in a cloth room are scissors, cloth nippers, weaver's combs, a block of wood, a cloth

Digitized by Google

rubber, water, soap, and oxalic acid. The scissors are for the purpose of cutting out defective lengths of cloth, separating the pieces of cloth into single cuts, and clipping off loose ends of yarn. The nippers, shown in Fig. 8 (*b*), are for the purpose of grasping slubs and lumps in the cloth that have not been otherwise removed, and drawing them out. The comb, Fig. 8 (*a*), consisting of a number of sharp teeth leaded into a brass back, is for the purpose of scratching adjoining ends of warp or picks of filling over a thin place

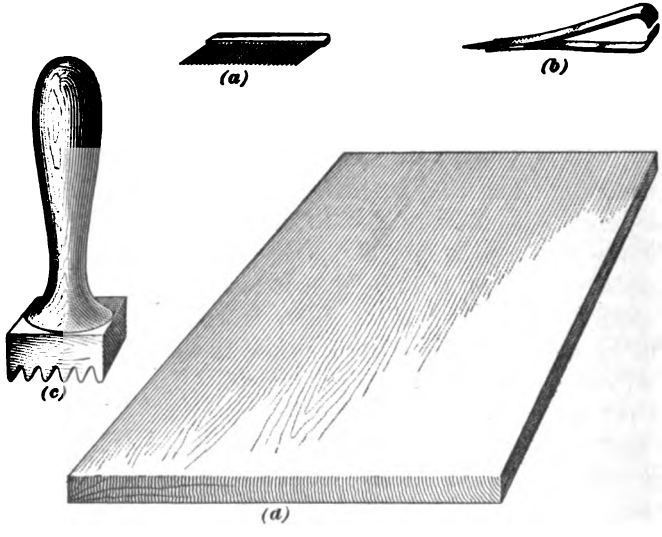

FIG. 8

or hole; as, for example, after a slub has been removed, the comb is used to draw over the open space preceding or succeeding picks of filling and remove any evidence of a flaw in the cloth. Small floats are scratched over in the same way. Spots or streaks of black oil are often found in cotton cloth, and if caused by a spot of oily lint, can sometimes be picked out with the nippers, but more frequently after doing so, or in case it is impossible to remove it with the nippers, the black place must be soaked in oxalic acid and rubbed until the black spot disappears, after which that portion of the

Digitized by Google

cloth must be carefully and thoroughly rinsed out with clear, cold water, so as to prevent the action of the acid continuing and *tendering* the fabric.

In some mills the use of oxalic acid for this purpose is prohibited, and oil stains are removed by means of soap and water. A good plan is to have a piece of whitewood board about 9 inches wide, 18 inches long, and $\frac{5}{8}$ inch thick, Fig. 8 (*d*), which is used bare or covered with several thicknesses of cloth and placed under the oily mark. A little water is then poured on the fabric and the spot rubbed with white soap of good quality. When it has become thoroughly saturated with soap and water, it is rubbed with a wooden cloth rubber, such as is shown in Fig. 8 (*c*), which is an implement having the upper part fashioned into a handle and the lower part corrugated, until the marks are effaced, after which the cloth is rinsed with clean water and wiped as dry as possible with a clean cloth.

SUMMARY

32. A summary of the combinations of machines and processes used in the cloth room is now appropriate. The treatment of fabrics in the cloth room and the number of processes used depends on: (1) the class of goods made by the mill; (2) the differences of opinion among mill men as to what is suitable treatment even for the same fabric; (3) the policy of the management, whether tending toward economy in cost at the expense of quality or the desire to produce the best quality irrespective of cost.

Inspection and folding or rolling are the only absolutely essential processes in the cotton cloth room. Some mills making standard goods, such as print cloths, where little advantage is to be gained by making a high quality and where the only thing to be noted in the cloth room is to prevent too low a quality, are content with passing the cloth directly from the loom through a folder, inspecting it afterwards by hand, and then baling the cloth for shipment. Where such fabrics are shipped in a roll, they are passed

Digitized by Google

through a sewing-and-rolling machine, inspected at the same time, and shipped in the roll; or sometimes after being sewed and rolled they are passed through an inspecting machine, rolled, and shipped.

The later processes of brushing, shearing, and calendering depend on the conditions named. Shearing is adopted only when it is desired to bring out the pattern strongly or produce a comparatively bright face on the fabric, and where shearing is adopted it is always combined with brushing. Shearing-and-brushing machines may be used for coarse, medium, or fine fabrics, the differences being in the adjustment of the shears and brushes, since a delicate fabric will, of course, not stand the same amount of shearing and brushing as a coarse or medium fabric. The number of shears and brushes, generally speaking, is determined by the cloth to be operated on; the larger numbers being used for heavy and coarse fabrics. In some cases a large number are used for fine fabrics, each being set to operate lightly.

Emery rolls, beaters, and card rolls are usually applied only to those machines intended for dealing with coarse or medium fabrics, especially such as duck, ticking, sheetings, twills, etc. Such heavy fabrics will withstand the pressure and strain brought on them by the emery rolls, the beaters, and the card rolls, being finally treated by stiff brushes and either calendered or not, according to the requirements of the mill or of the buyer. For such fabrics it is not common to use shears, since sheetings and similar goods are enhanced in value if they have a full, soft appearance and feel.

The removal of dust, dirt, and small particles of foreign matter is desirable for all fabrics, and consequently brushing combined with a strong exhaust fan for removing the dirt brushed off is common to the treatment of almost all fabrics. In general, therefore, it may be stated that coarse, heavy goods, where a bare surface is not desired, are treated by emery rolls, beaters, card brushes, stiff brushes, and are sometimes calendered. Coarse goods, where a full, soft face is not desired, are treated by shearing also. Medium

Digitized by Google

and fine goods, where a bare face is desired, are sheared and brushed, but not usually calendered, the extent of the shearing and brushing being determined by the number of shears and brushes in the machine and by the closeness or openness of the setting. Fine goods, of course, will not stand as close a setting as medium and coarse goods. Sewing machines are only used where the fabric is to be shipped in a roll, or where a number of cuts are to be sewed together to facilitate the passage of the cloth through the shearing, brushing, or calendering machines. Otherwise, the sewing-and-rolling machine has no part whatever in changing or improving the appearance of the fabric.

The absolutely necessary processes in a cloth room are merely those that change the form from that in which the cloth leaves the loom to that in which it is to be shipped, namely, the folding or baling, or in some cases rolling, and, where required, stamping or ticketing. All other processes are optional. In fine-goods mills, especially those making fancy goods, and where the cloth is to be immediately forwarded to the converter, it is not usual to adopt any machines except the folding and inspecting machines and baling presses. The pieces are not even sewed together, but each piece is inspected on a machine of simple construction, then folded, inspected, and afterwards baled.

Digitized by Google

Digitized by Google

MILL ENGINEERING

(PART 1)

MILL CONSTRUCTION

SELECTION OF A MILL SITE

1. Introduction.—The immediate reasons for the erection of textile mills may be classed under three heads: (1) capitalists seeking a new location of investment; (2) established mills making extensions; (3) local individuals promoting the erection of a mill. Under the first condition a company or corporation is first formed and the necessary capital invested. A location for the plant is then chosen, in which connection there are many points to be considered, all of which depend on the natural and artificial advantages of the locality. From the mill engineer's point of view, the natural advantages of a location, such as the character of the soil on which the foundation is to rest, the reliability of the water supply, if water-power is to be used, and many other like considerations are the more important, while from the manufacturer's standpoint, the artificial advantages, such as proximity to the market and to the raw-stock supply, and the class of help that can be utilized, are the more important. It is the function of the mill engineer to adapt a site, often chosen without particular regard to engineering considerations, to the needs of the manufacturer.

Under the second and third conditions, the choice of the site for a mill structure is generally more limited, and both the manufacturer and the engineer must adapt themselves to

For notice of copyright, see page immediately following the title page

Digitized by Google

the conditions that are met with, especially when additions are to be made to established plants.

2. Class of Goods to Be Manufactured.—In entering into a discussion of the natural and artificial advantages of various locations, the first consideration should be the class of goods that is to be manufactured. For instance, if the mill is to manufacture cotton yarns or fabrics and a fine quality of goods is to be made, it is advisable to locate the mill in a district where there are other fine-goods mills; that is, in a fine-goods center. For the medium and coarser grades of cotton manufacturing the South is now offering excellent locations, while the fine-goods mills are still largely confined to the North. The same conditions apply to silk mills, which are usually concentrated in some locality that is especially adapted to their needs, owing to its proximity to a supply of labor, or other considerations. If the mill is to engage in the manufacture of woolens or worsteds, the field is larger, since these industries are not so concentrated, but more scattered throughout the country, each mill being erected where the best and most advantageous conditions are found; worsted mills, however, are more concentrated than woolen mills.

3. Help to Be Employed.—One of the main considerations entering into the choice of a locality for the plant is the class of people from which operatives can be obtained. It is preferable to locate the mill where skilled and trained help can be obtained at a minimum expense; but if this is impossible the mill should be located in a district where large numbers of intelligent people can be utilized as operatives even if they are totally untrained. With the aid of a skilful superintendent and overseers, together with a few skilled workmen, this class of help can, in a short time, be trained to meet the requirements of the mill. Formerly the native help was depended on entirely in American mills, but of late years a large number of French-Canadians, Portuguese, etc. have been utilized, so that a well-located mill is often situated in close proximity to a large resident population of

Digitized by Google

foreign help. In the South, many mills are located in the upland, or mountainous, districts and the mountain population is drawn on for the necessary help. In the North and Middle States, the question of a good supply of native help is not so important, because of the large resident colonies of foreign help in all large manufacturing centers.

4. Market and Transportation Facilities.—The proximity to the raw-stock supply is also an item of the utmost importance to the manufacturer, and in the South many mills are advantageously located near, and in some cases actually in, the cotton fields. The Northern and Middle States, which are essentially manufacturing districts, do not offer these advantages, and the mills should be located preferably with reference to large markets and shipping points. This is true of cotton, woolen, worsted, and silk mills, since by this means the raw stock can be more readily and cheaply transported to the mill, while the buyer for the mill is also able to keep in closer touch with the fluctuations of the market, thus enabling the mill to purchase to advantage, and likewise keep in closer communication with the selling houses.

Railroad and other transportation facilities should in all cases be carefully considered, and if possible the mill should be situated in close proximity to two or more railroads or other methods of transportation under separate control, thus securing the advantage of competitive freight rates. It is always an advantage to have the plant situated on the direct, or main, line of a railroad, but in some cases where this is impossible the railroad company, especially in the South or West, can be induced to run a spur, or branch, track to the mill, provided that the amount of traffic will warrant the expense; the railroad companies will not always do this in the Middle or Eastern States, however. Railroad facilities are indispensable and the distance from the market is not so important an element as the freight rates, for it often happens that one location, while more remote from the market than another, offers greater facilities for transportation.

Digitized by Google

5. Fuel and Mill Supplies.—Another consideration that should enter into the choice of a location is its proximity to the machine shops where the equipments of the mill were purchased, and which also are frequently sources of mill supplies; since if the locations are near, parts of broken machines, supplies, and other materials can be obtained at short notice, thus preventing portions of the mill from lying idle while awaiting repairs. This is an especially important consideration with mills that are not equipped with complete machine shops, including facilities for producing parts of the machinery most liable to become worn or broken.

A mill should be located near large coal fields, if possible, thus insuring a plentiful supply of fuel at low rates; but, as in the case of New England, this is often impossible. In many instances the best location is on tide water, since the rates of transportation of coal by water are much lower than by rail.

6. Water Supply.—If the mill is to be located on a stream and water-power is to be used, several points in regard to the character of the stream should be noted. The abundance of the water supply for a number of successive years should be determined, in order that the maximum and minimum amount of flow can be ascertained. It should be determined whether the minimum supply will be sufficient to operate the mill; in this connection the extent of the watershed, or area drained, should be considered, since some very small streams are never known to run dry, while many larger ones run extremely low during certain portions of the year. The water supply should be as uniform as possible and the river free from freshets as well as from dry periods. A river that is free from ice is also to be preferred to one that is periodically blocked, although the Merrimac River, on which Manchester, New Hampshire, and Lowell and Lawrence, Massachusetts, are situated, and which is the largest manufacturing river in the world, is subject to both ice and freshets. The natural conditions that govern the construction of the dams, canals, sluices, etc. should also be considered

Digitized by Google

before finally deciding on a mill site, as these will enter largely into the cost of construction, unless there is an existing water-right from which water-power can be purchased. As water-power is the most easily developed power and can be had for a very small expense, many small mills are located largely with reference to the water-power facilities.

Care must be taken also to have a suitable water supply for general mill purposes, such as for the boilers, drinking water, dyeing purposes, and in the case of woolen and worsted mills for scouring and finishing. The mill should also be located with regard to the drainage and sanitary conditions and should preferably be situated on a gentle slope.

7. Formerly the climatic conditions were a very important consideration in the location of a mill, because of the greater facility with which some fibers could be manipulated under certain atmospheric conditions; but at present this is of little importance, since the temperature of the mill is easily regulated, and with the improved types of humidifiers now on the market the percentage of moisture in the air is easily governed.

In many cases, especially in newly developed territory, local authorities will remit the taxes of a proposed plant for a term of 5, or sometimes 10, years as an inducement to attract worthy enterprises to their locality. Offers of this kind should always be solicited and accepted, provided that no serious conflict with other advantages is thereby created.

EXCAVATIONS

CHARACTER OF SOIL

8. After the general locality of the mill has been decided on with due regard to the natural and artificial advantages, it is necessary to choose the actual site of the structure. In this connection the character of the soil on which the foundation is to rest should receive the most careful consideration. It is well to have expert engineering advice on this point, since the services of a mill engineer are invaluable in the

Digitized by Google

erection of large and important mill structures. A good mill engineer, especially one who is independent of machine shops, will save the cost of his fees many times over, not only in the reduced cost and increased stability of the structure and its equipment, but also in the reduced cost of operating the mill, by so arranging the equipment that the transit of material and the number of employes necessary are reduced to a minimum.

A perfect foundation is one of the most difficult problems of engineering as well as one of the most important, for on it depends the stability of the whole superstructure. If after completion and the installation of the machinery the structure settles to any great extent, the results are disastrous; even a small settlement, especially if not uniform, will cause great annoyance by throwing the shafting out of line. When this happens the wear and tear on the shafting and hangers is greatly increased, as well as the power required to drive the mill. Besides the annoyance resulting from having the floors out of level, if the foundations are weak or insufficiently supported, all the subsequent stonework and brickwork are likely to crack and greatly spoil the appearance, and lessen the strength, of the structure.

Before building the foundations for the mill the ground must be excavated, either for the basement or for trenches, so as to place the masonry below the frost line; but before the excavation is begun the nature of the soil that is to support the foundation should be determined. If this cannot be determined from existing structures or wells, borings should be made. For this purpose, an auger about 2 inches in diameter and of suitable length is used—similar to an auger for wood boring—and tests made, from 5 to 10 feet apart, over the entire area of the foundation. As the auger brings up samples of the soil, the character of the substrata is determined. When the importance of the proposed structure requires it, trial pits are sometimes dug from 10 to 20 feet apart, especially where a shelving bed of rock or gravel exists at a comparatively short distance below the surface.

Digitized by Google

It is not always safe to rely on the character of the soil in close proximity to the proposed mill site, since conditions varying from a bog to a solid granite ledge are often found in the space of a few yards. The soil or strata usually met with in building operations may be classed under three divisions—*rock*, *virgin soil*, and *made ground*.

9. Rock, in its original geological formation, is spoken of as bed rock, or solid ledge. It forms the finest foundation for heavy structures, provided that it is of sufficient area for the entire mill to rest on. But it is undesirable to have a portion of the foundation rest on a ledge while another portion rests on a softer material, since the mill will not settle uniformly and the walls will often crack open at the junction of the ledge and softer material. It often happens that the surface of the rock is uneven and requires considerable blasting and concrete work to secure a good foundation, which adds considerably to the cost. The sandstones and limestones are often found in strata, beds, or layers, one on another; if these layers are not separated by clay, and the beds are even, they make good foundations. The strata, or beds, of rock may shelve, or dip, at varying angles, especially in hilly sections. A ledge is not always reliable, and in many cases will be found to be shaly in structure, partly decomposed, or faulty in other respects.

10. Virgin soil is either gravel, clay, loam, sand, or marshy ground in its natural condition.

1. *Gravel*, when compact and united with sharp sand into a firm, unyielding stratum, is known as *hard pan*. It makes the best foundation (except bed rock) and, on account of its being more easily leveled, is much less expensive to build on. Usually a 6- or 8-foot stratum of gravel will support any mill structure although there may be softer material underneath.

2. *Clay* is the most uncertain of soils, owing to its elasticity, due to being mixed with marl, etc.; to its tendency to absorb moisture; and, in many cases, to the position of its bed or strata. In dry seasons it is very firm, while in wet

Digitized by Google

seasons it is elastic and unreliable. When the layers of clay are inclined, the foundation has a tendency to slide, producing results threatening the stability of the superstructure.

3. *Loam*, or clay mixed with sand and other earthy substances, when compact and of considerable depth, is a good material to build on, provided that the structure is not an extremely lofty or heavy one.

4. *Sand* is formed from the decomposition of the older rocks, either by the effects of the weather, the action of heavy rains, the wearing away by running water, or the spontaneous decomposition of the rocks themselves. The particles are carried to the rivers and either deposited in their beds or borne out to the ocean. The sand usually found in excavations has its origin either as the formations in the beds of ancient rivers that have long ceased to flow, and is therefore called *river sand*, or by the attrition, or grinding, of the rocks themselves during the geological upheavals in past ages. The latter is called *virgin*, or *pit*, *sand*, and has never known the action of water.

5. *Quicksand* is a very fine sand, often mixed with clay or loamy material in such proportion that it will retain water until it is perfectly saturated. But by confining quicksand and keeping it as nearly dry as possible, it may be excavated or built on with little more difficulty than common sand. In many cases, quicksands are mixed with a bluish or leaden-colored silt, or soapstone slime. Often in excavating quicksand, beds of this blue marl are found; when wet it is tough and hard, but when dry, it crumbles to a powder and is utterly unfit for foundations. An attempt to excavate in quicksand without previously getting rid of the water contained therein, is almost as useless as to dig in water itself, for the saturated sand will flow into the excavation as fast as it can be removed.

6. *Marshy soils* are formed by the decay of plants, weeds, and other vegetable matter in sluggish water, which, having no current, allows the plants, etc. to take root in the bed. When these plants die, others take their place each year. These successive beds of decayed matter are formed under

Digitized by Google

slight pressure and have innumerable cavities between them, as would a heap of decayed hay. Sometimes these deposits reach such a depth that their bottoms have not been reached. Large areas of marshy lands are formed in this way, by the periodical overflowing of rivers, and the rise and fall of the tides along the coast. The terms *swamp* and *bog* are often used and may be considered here as having the same meaning as marshy soil.

During freshets, rivers bring down large quantities of soil held in suspension, which is deposited when the waters subside. This formation is called alluvial, from the Latin word *alluvius*, meaning a washing upon. The term alluvial is often used to designate deposits that are of yearly recurrence, as the Nile and the Mississippi deltas, although the river bottoms of many streams are of this origin. The value of alluvial soil for foundation purposes varies considerably. In many cases, it consists of a clay formation that is hard on top, especially during dry weather, but soft and unreliable underneath. Heavy buildings should not be erected on alluvial ground without a careful investigation of the subsoil by means of borings or trial pits.

11. Made, or artificial, ground may consist of various kinds of materials; such as the refuse of cities, earth and other materials removed from cellars and other excavations, the cinders, ashes, etc. from manufactories and furnaces. It should not be built on, if the structure is of importance, until the nature of its subsoil has been investigated, though for minor edifices a suitable foundation may often be obtained on it.

12. From this description of the soil and materials met with in foundation beds the following deductions may be made:

It is generally safe to build on bed rock any structure that may be required, provided that the foundation beds are kept level.

Gravel, even when mixed with small boulders, can be considered perfectly reliable for any ordinary structure, under usual conditions.

Digitized by Google

Sand will carry very heavy loads, if it is confined; but great precautions must be taken to properly confine it, and also to keep water, especially if running, from it, as the action of water will soon wash it away.

Clay, when compact and dry, will carry large loads, but water should be kept from it, both under and around the structure, the foundations of which might otherwise give way, due to the difficulty of retaining the pasty or semi-liquid mass formed.

A thick, hard, or compact stratum, overlying a much softer one, even silt or quicksand, will often carry a considerable load, the hard stratum floating on the soft as a raft floats on the water. It is usually better not to break through this hard stratum, as it serves to spread the base and distribute the pressure over a large area.

The silt, slush, and decayed vegetation contained in the marshy lands, especially in the Southern States, are not fit to build on without piling.

BEARING VALUE OF FOUNDATION SOILS

13. There is some difference of opinion regarding the safe bearing value of foundation soils, due probably to the difficulty of arriving at any experimental results that will have a general application. Conservative engineering practice dictates that the greatest unit pressure on the different foundation soils shall not exceed the values given in Table I.

FOUNDATIONS

FOOTINGS

14. It is important that the area of the footings, or supports, for the foundation wall be increased beyond that of the latter in order to decrease the weight per square foot. By spreading the weight of the structure over a larger area, it is more evenly distributed, and the likelihood of a vertical

Digitized by Google

TABLE I

SAFE BEARING VALUES OF DIFFERENT FOUNDATION SOILS

Material	Tons per Square Foot
Granite formation	30
Limestone, compact beds	25
Sandstone, compact beds	20
Shale formation, or soft, friable rock	8 to 10
Gravel and sand, compact	6 to 10
Gravel, dried and coarse, packed and confined	6
Gravel and sand, mixed with dry clay	4 to 6
Clay, absolutely dry and in thick beds	4
Clay, moderately dry and in thick beds	3
Clay, soft and semifluid	1 to 1½
Sand, compact, well-cemented, and confined	4
Sand, clean and dry, in natural beds, and confined	2
Earth, solid, dry, and in natural bed	4

settlement, due to the compression of the ground, is greatly diminished. For this reason, the higher and heavier the building is to be, the wider and deeper must be the supports, or footings, for the foundation; and if extremely soft or yielding ground is encountered, piling should be resorted to in order to carry the weight of the building to a more solid base.

15. Footings may be of iron; timber; large, flat, building stones, laid directly on the ground or on a bed of concrete; or they may be of concrete alone, or concrete and stepped-up brickwork. Where piling is used, heavy capping timbers are often placed on the heads of the piles, with either stone or concrete footings; or large footing stones may be laid directly on the piles.

16. Timber Footings.—Timber is often used for footing courses where a large bearing surface can be obtained

Digitized by Google

and is necessary; provided, always, that the timber can be kept from rotting. In some cases the timber is charred on the outside; in others, it is coated with asphalt. If the ground is continually wet, there is little to fear, as timber will not decay when continually saturated with water; but when alternately wet and dry, unprepared timber cannot be depended on.

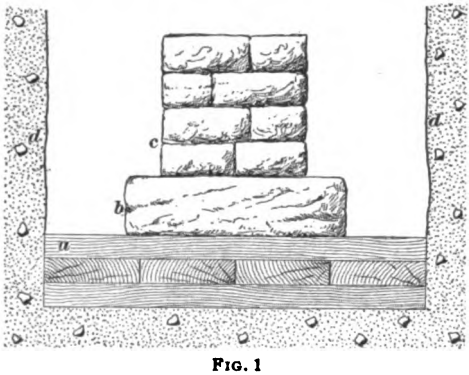

FIG. 1

. The best method of placing plank under walls for footings is to use 3″ × 12″ plank cut in short lengths and laid crosswise in the trench. A layer of plank of the same size is then laid lengthwise, and the third layer is placed transversely. As

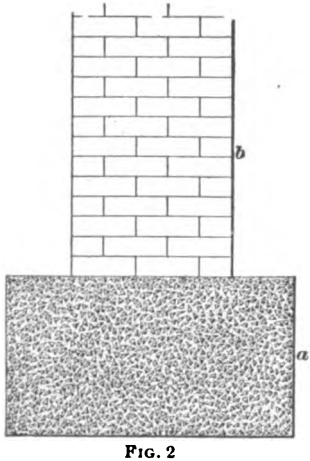

FIG. 2

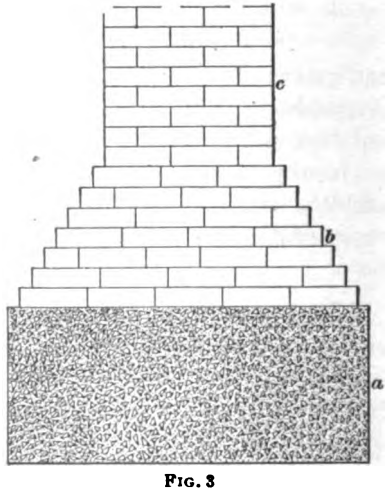

FIG. 3

shown in Fig. 1, *b* is the stone footing resting on the planks *a* and carrying the stone foundation wall *c* between the walls *d*, *d* of the trench.

Digitized by Google

17. Concrete and Stone Footings.—Fig. 2 shows a 20-inch brick foundation wall *b* on a concrete footing *a* 20 inches thick and 3 feet wide.

Figs. 3 and 4 show the concrete base *a* and stepped-up brick footing courses *b*. In Fig. 3, each course of brickwork sets back $1\frac{1}{2}$ inches for each course; in Fig. 4, the courses are set back 3 inches for each two courses. At *c* is shown a 20-inch brick foundation wall resting on the stepped-up brick footing.

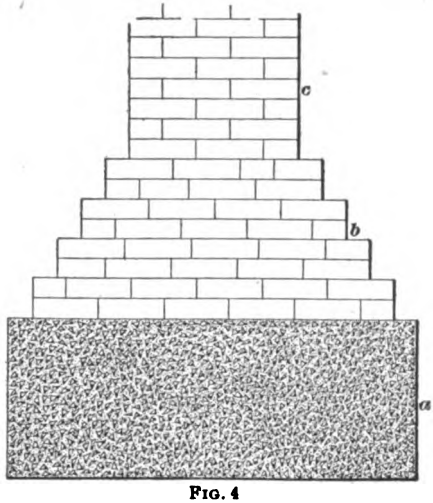

FIG. 4

Fig. 5 illustrates a stone footing composed of three courses *a* of flat stone, each course being 8 inches thick. The top course has a projection of 6 inches on each side of the 20-inch brick foundation wall *b*, while the middle and bottom courses project 3 inches each, making the width of the bottom stone 3 feet 8 inches.

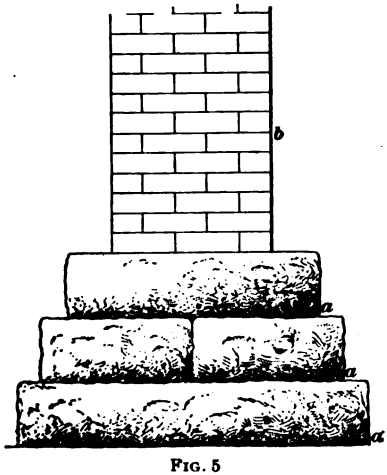

FIG. 5

Fig. 6 shows a stepped stone footing *a*, similar to that shown in Fig. 5, but supporting a 24-inch stone foundation wall *b*. Each base course advances in stages of 3 inches.

Fig. 7 shows a footing consisting of a single course of stone *a*, 8 inches thick and 2 feet 4 inches wide, carrying a stone wall *b* 20 inches thick.

Digitized by Google

18. As a general rule, concrete, when of sufficient depth and width and properly made and laid, makes the best of footing courses. It should be made of one part good cement, three parts clean, sharp sand, and five parts sharp, broken stone. In very important work, such as the footings of very high buildings, chimneys, etc., a proportion of one part cement, two parts sand, and four parts broken stone is generally used. The New York building laws call for the first proportion.

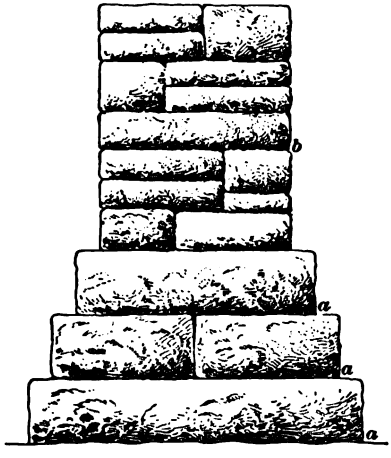

FIG. 6

None of the stone used in making concrete should be larger than will go through a 2-inch ring. In localities where stone cannot readily be obtained, broken brick or terra cotta may be used in the same proportion as stone, taking care to use good hard-burned material. Well-broken foundry slag and scoriæ, steam-boiler ashes from anthracite coal, and clean-washed gravel, mixed in the proportion given, make good concrete, though gravel, being round and smooth stone, does not adhere to the cement as well as broken stone, slag, brick, or scoriæ.

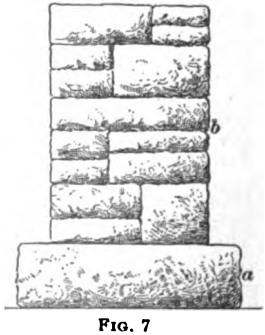

FIG. 7

In preparing concrete, the material should be worked on a platform of boards, with sides about 10 inches high, battened on the back and laid on the ground near the work. The platform is used in order that no loam or clay may contaminate the concrete, the effect of which would be a loss of strength in the concrete, as the clay adheres to the stone and prevents close contact with the

Digitized by Google

cement. The sand and cement should first be thoroughly mixed by being shoveled together while dry, at least twice, so that there will not be an unequal proportion of sand to cement in different parts of the heap. The broken stone, or whatever material is used for the *aggregate* (as the stone, slag, or other coarse material is called), should then be added, the mixture being kept wet all the time and thoroughly shoveled together, so that every portion of the stone or other material may be perfectly coated with the cement. No concrete should be made unless it is to be used at once, because the cement, forming its most essential part, sets or hardens quickly, and if it sets before being placed in the footing trenches, it is valueless.

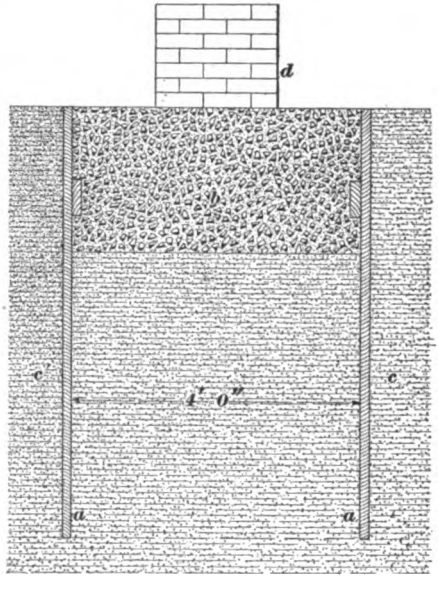

FIG. 8

19. Fig. 8 shows a method of confining quicksand by using sheet piling, between which the concrete is placed. The sheet piling *a* is placed, in this case, 4 feet apart; the concrete *b* is 2 feet thick and extends the full width of the piling; the quicksand, through which the sheet piling is driven, is shown at *c*, and the 20-inch brick foundation wall at *d*.

Fig. 9 gives an example of a footing, composed partly of timber, that was placed near the water-line of a marsh, in New York state, to carry a mill 50 feet by 80 feet and 40 feet high. The soil is a stiff, black muck, and at a depth of about 5 feet, water-soaked sand was found. A concrete bedding *a* 12 inches thick was laid in the trenches; on it 2-inch spruce

Digitized by Google

planks *b* were placed crosswise, and then 8″ × 8″ timber laid parallel with the trench and filled in with concrete. On these were laid the base, or bed, stones *d*, on which was built a 20-inch foundation wall *e*. The trenches on each side of the wall were filled in with sand, rammed down, as shown at *f*. No settlement has occurred, though the mill has been built several years.

20. Stone footing courses should be laid with large, flat stones not less than 8 inches thick. If more than one course is laid, as shown in Figs. 5 and 6, the joints should never come over each other as this would defeat the object of bonding, which is to tie firmly together the parts of the wall. All stone footings should lie on their natural, or quarry, beds, and all the joints and spaces between the stones must be well filled with mortar, which acts as a bedding between the stones and prevents the uneven pressure of one stone on another, which might cause a fracture of the lower one and produce settlement. All footing courses, as indeed all mason work below ground level, should be laid in cement mortar, although in dry, well-drained soil lime-and-cement mortar may be used.

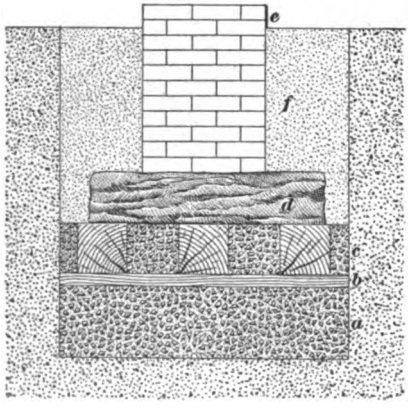

FIG. 9

21. Stepped-up brick footings having concrete bases, as shown in Figs. 3 and 4, are often used. The pyramidal form of stepped-up brickwork carries the load of the superstructure more evenly to the footings and reduces the risk of settlement or fracture; it is used very extensively for piers supporting iron columns. Nothing but good, hard, well-burned bricks should be used, and they should be laid in cement mortar and should break joints; that is, no

Digitized by Google

two joints in successive courses should come directly over each other.

22. Footings on Rock and Gravel.—In placing foundation footings on rock, it is sometimes found that some portions of the footings will rest on the rock, and others, owing to the diversified character of the surface, will rest on clay, sand, or gravel. The settlement of the foundation walls—and as a necessary sequence, that of the whole building—will then be uneven, as the walls resting on the rock will not settle, while those resting on the sand, gravel, or

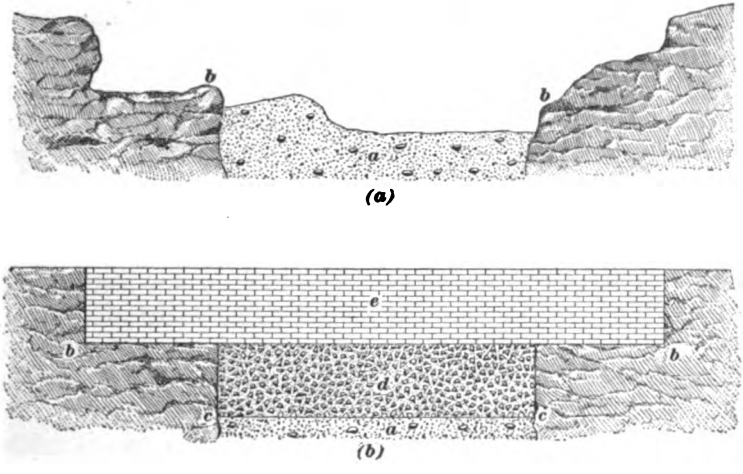

FIG. 10

clay will, by compressing the material on which they are carried.

Fig. 10 shows the method used to obtain equal settlement in this case. At (*a*) is shown the rock and gravel before leveling or excavating, *a* indicating the clay or sand, and *b*, the rock. It is customary to remove the rock to a certain level, as shown in (*b*). The softer soil *a* is then removed and leveled off, as at *c c*, and a bed of concrete about 3 feet thick, as shown at *d*, is then put down; the concrete is brought to the level of the rock and the brick or stone foundation wall *e* is built on it.

Digitized by Google

23. Footings for Piers.—The brick or stone piers or iron or wooden columns that support the timbers of the first floor should be set on concrete and stone or stepped-brick footings of sufficient area to support, without appreciable settlement, the weight that they will carry. Even more attention should be paid to these footings than to those of the foundation walls, since the piers carry the weight of the whole interior of the structure, including the floors, machinery, stock in process of manufacture, and live load, while the footings for the foundation walls support practically but little more than the actual weight of the mill walls. The piers are also subjected to a greater amount of vibration from the machinery than the foundation walls—an element that is peculiarly liable to produce excessive settlements. Vibration becomes an important factor where a large amount of weaving machinery is to be supported.

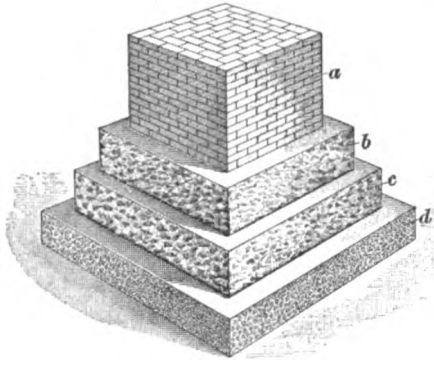

FIG. 11

Fig. 11 shows a brick pier *a* resting on a base stone *b*, which in turn is supported by a bed-stone *c* resting on a thick bed of concrete *d* of sufficient area to carry the required load. In many cases only one stone is used between the pier and the concrete. When wooden or iron columns are supported in this manner, an iron plate should be let into

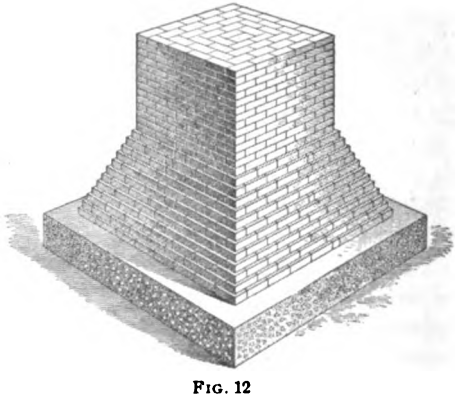
FIG. 12

Digitized by Google

the upper surface of the base stone *b* to give a true bearing for the column, as the load that can be safely carried will thereby be greatly increased.

Fig. 12 shows a brick pier resting on stepped brickwork and supported on a concrete base. Sometimes the concrete footing for piers is made to run the entire length of the mill, to insure sufficient bearing surface and thus do away with any settlement and prevent the soil squeezing up between the piers, as it sometimes does when heavy structures are supported on isolated piers.

PILING

24. Piling is an important branch of foundation work that, although not masonry work in itself, is yet, as a supporting structure, considered as pertaining to masonry construction. A *pile* may be considered as a column with a base more or less rigid, according to the nature of the soil into which it is driven. It is held in place by the pressure against its end and sides, just as a stick driven into damp sand will stand upright and support a load, even though it may not have reached firm bottom, the friction of the sand—or the pressure of its particles against the sides of the stick or pile—holding it in place. It is usual to excavate to a point below where the heads of the piles are to be cut off, in order that they may be leveled before the concrete is put in or the foundation begun.

Piles are usually driven by successive blows of a heavy block of wood or iron falling from a height. This block weighs from 1,200 to 2,000 pounds, and is called a *hammer*, *monkey*, or *ram*. It is raised by means of a rope or chain that passes over a pulley fixed on top of an upright frame, and falls between parallel guides directly on the head of the pile placed under it. The chain or rope is wound over a drum, which is driven by a small engine. After the hammer or ram is drawn up to the required height on the frame, it is released, and falls on the head of the pile, forcing it into the ground.

Digitized by Google

Piles are generally round and from 9 to 18 inches in diameter at the head, and should be straight and clear from bark and projecting limbs; but where piles are exposed to the rise and fall of tides, it is considered best to drive them with the bark on, since they are then not so easily affected by the action of sea-water, and are not likely to be attacked by the *teredo navalis* and other boring sea worms.

Oak, spruce, hard pine, cypress, and elm are the principal woods used for piling. Oak has the advantage of being hard and tough, and stands hammering well, but cannot be obtained in as large, straight, or long pieces as other woods.

Piles are prepared for driving by cutting or sawing the large end square and bringing the small end to a blunt point with an ax, the length of bevel being about $1\frac{1}{2}$ or 2 feet. In very soft and silty material, however, they can be driven in better line if left blunt. A pointed pile on striking an obstruction, invariably glances off and is thrown out of line; the blunt pile, on the contrary, cuts or breaks through the obstruction.

The large end of the pile should be cut or chamfered for a few inches from the end, so that a wrought-iron ring about 1 inch thick and approximately 3 inches wide will fit over it tightly when struck one or two light taps by the hammer, or ram. Sometimes a ring from 1 to $1\frac{1}{2}$ inches less in diameter than the pile is placed on the top of the pile, and driven into it by light blows; this, however, is not as desirable as the other method, as the ring is apt to split long pieces from the sides of the piles, and usually is not put on until the pile is more or less battered on the end, so that it is carelessly placed and is not concentric with the head of the pile. The rings lessen the tendency of the pile to split or *broom* from the repeated blows of the ram. This splintering of the fibers is known as *brooming*.

25. Shoeing Piles.—Piles driven through soft material have a tendency to split on reaching rock or hard gravel, thus greatly impairing their bearing capacity; to prevent this, their ends are often protected with wrought- or cast-iron shoes.

Digitized by Google

Fig. 13 illustrates three methods of doing this. At (*a*) is shown a $\frac{1}{2}'' \times 2\frac{1}{2}''$ wrought-iron strap *a* bolted to the pile *b*, forming a shoe that is the same on both sides of the pile. At (*b*) is shown a cast-iron conical shoe fitted over the end of the pile *b*; the head *c* protects the end of the pile and the straps *a* hold the shoe in place. Fig. 13, (*c*) shows one of the best forms of cast-iron shoes. The pile has a blunt end from 4 to 6 inches in diameter, shown at *b*, which the top of the solid conical point of the shoe *c* fits; the straps *a* extend up the sides of the pile, and are bolted or spiked to it, as shown. The straps and bolts hold the shoe in place, while the flat end of the pile receives the effect of the blow.

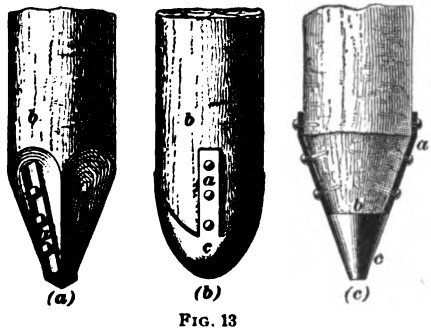

FIG. 13

26. Timber Footings on Piles.—For footing courses on pile foundations several methods are practiced. Fig. 14 shows a timber footing course, or capping, laid below the water level to prevent rotting. Heavy timbers *b* are spiked

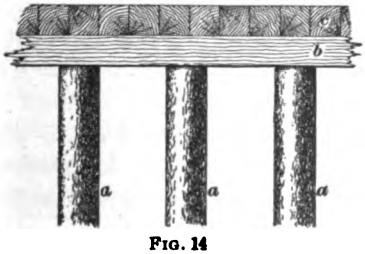

FIG. 14

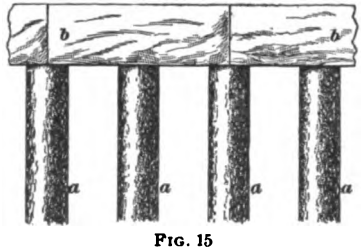

FIG. 15

longitudinally to the tops of the piles *a*, which are cut off at an even height, and the timbers *c* laid transversely on and secured to these. By this method the load is distributed evenly over the tops of the piles.

27. Stone Footings on Piles.—Fig. 15 illustrates footings made of large-sized building stone with level beds,

Digitized by Google

a being the piles and *b* the building-stone footings. These stones must in every case rest directly on the piles. Great care must also be taken that one pile comes under each corner of the stone, to keep it from tipping, and that the stone has a full bearing on each pile head. To insure this, the piles must be sawed off perfectly level and all the same height, as no pieces of wood or small bits of stone should be placed under the stones to give them bearing on the piles; wooden chips crush under a load, and pieces of stone are likely to be broken or dislodged, leaving the block in a state of dangerous instability.

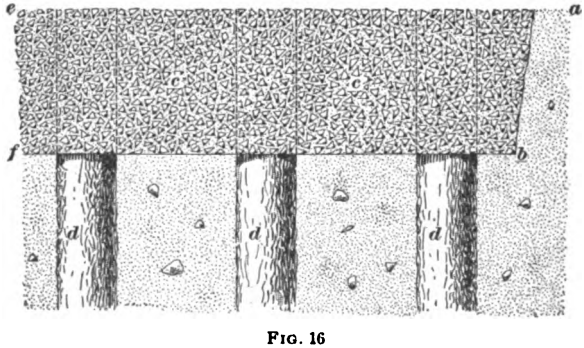

FIG. 16

In many cases concrete filling is used between the piles, as shown in Fig. 16. After the piles are cut off at the water level, which is shown at *a e*, the earth is excavated to *b f*, usually about 2 feet, and the space thus obtained is filled in with the concrete *c*, well rammed around the sides of the piles *d*, and leveled off at the top to carry the foundation walls. This method is best adapted to situations where the soil is constantly wet, as then the piles will not become dry and rot.

In some instances the piles are covered with 3-inch planking laid transversely on top of the concrete and the foundation walls built on this.

Digitized by Google

FOUNDATION WALLS

28. The **foundation walls** above the footing courses are usually of stone or brick. The method of building brick foundations is the same as for all brick walls; therefore it will not be described here, but will be taken up under Brickwork.

29. Thickness of Walls.—A very good rule for fixing the thickness of stone foundation walls is, that they shall be at least 8 inches thicker than the wall next above them, for a depth of 12 feet below the surface; and for every additional 10 feet or part thereof in depth, they should be increased 4 inches in thickness. Thus, if the first-story walls are 12 inches thick, the stone foundation walls should be 20 inches

TABLE II

THICKNESS OF FOUNDATION WALLS

Height of Mill	Brick Inches	Stone Inches
Two stories . . .	20	24
Three stories . . .	24	28
Four stories . . .	28	32
Five stories . . .	28	32
Six stories	32	36

thick for 12 feet in depth, and 24 inches thick if the depth is greater. The thickness of foundation walls in all large cities is controlled by building laws; where there are no existing laws, Table II will serve as a guide.

30. Stone-Rubble Foundation Walls.—Stone foundation walls below ground, when concealed from outside view, are usually constructed of rough rubble, as shown in Fig. 17, which represents an elevation (*a*) and section (*b*) of a 20-inch rubble stone wall, shown at *a*, 10 feet high, with footing stones *b*, 8 inches thick, and 2 feet 8 inches wide. These walls should be bonded together as shown in Fig. 18, where

Digitized by Google

a shows a *bond stone*, or *header*, of the stone foundation wall *b*. All stone walls 24 inches or less in thickness should have a header extending through the wall at least every 3 feet in height and 4 feet in length; if the wall is over 24 feet in

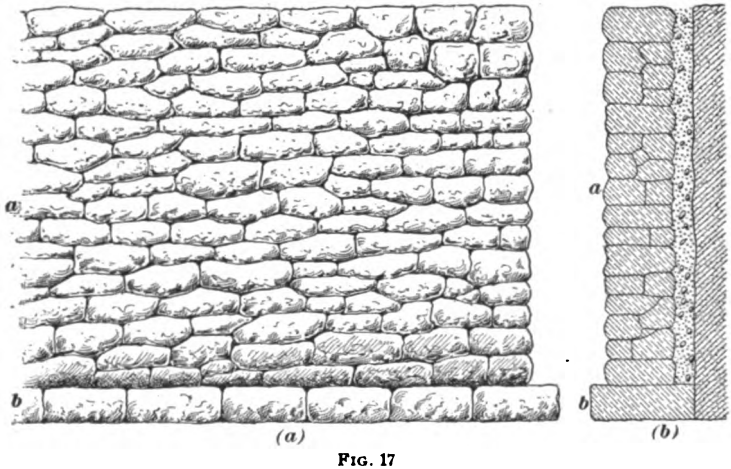

FIG. 17

length, one header should run into the wall at least 2 feet for every 6 superficial feet of wall space. These headers serve to bind the stones of the walls together and keep the foundation from splitting apart crosswise when weight is placed on it. They should not be less than 18 inches in width and 8 inches in thickness, and should be good, flat stones.

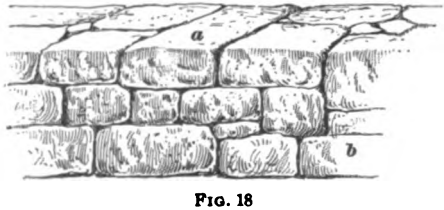

FIG. 18

FIG. 19

Fig. 19, at *a*, *a*, shows vertical joints coming one above another through several successive outside courses; this should never be allowed, but the joints should be broken, as shown in Fig. 17. Where a long vertical joint occurs, the

Digitized by Google

weight above may cause the wall to settle more on one side of the joint than on the other and produce serious rupture.

All wall angles should be well tied by long stones laid alternately, as shown at *a*, Fig. 20. By this means the weight on the corners of the wall is more equally distributed and the wall can be kept plumb and true.

Foundation stones should always be laid on their natural, or quarry, beds. The tendency to splitting, or cleavage, in a stone is with the grain or bed; so that when the stone is laid on the original bed, the weight of the material placed above it comes against its grain. No stone should have more face than bed, and one side, at least, should be reasonably flat. When laid, every stone should be well bedded in mortar.

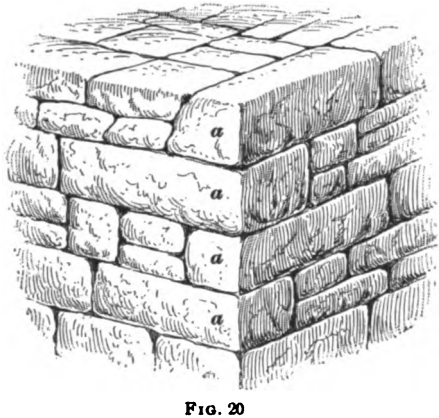

FIG. 20

31. The usual practice with masons in rough walling is, after setting the larger stones, to fill the interstices with spalls or chips of stone, or even pebbles, more or less carefully fitted, and put in dry; then to dash in mortar, trusting that it will work its way into the crevices. It does so to some extent, but the method is not a good one. A good, conscientious workman will place no stone, even the smallest chip, except in a bed of mortar prepared to receive it, rubbing it in well, and settling it with blows of the trowel and hammer; again driving smaller fragments into the mortar, which is squeezed up around it, so that all the stones have a layer of mortar between them.

It is a good plan to *grout* the walls; that is, fill all the joints with mortar made so thin that it will flow into the interstices, or spaces, between the stones.

Digitized by Google

For good work, the outside of the wall (even when concealed by the bank of the excavation) should be carried up with a good face, as shown in Figs. 17 and 20, and the joints well filled with either cement, or lime-and-cement mortar. If this is properly done, any moisture that runs out from the bank or descends from above, so as to flow down over the outer face of the wall, will drip off instead of running into the joints.

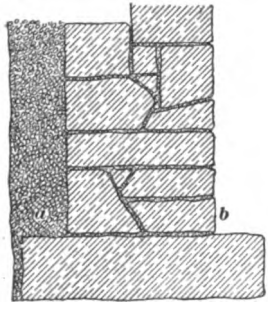

FIG. 21

The space between the outside of the foundation and the bank of the excavation should be filled in with gravel or sand (preferably the former) well packed down. Thus, in Fig. 21, *a* is the filling in the space between the foundation wall and the bank while *b* is the stone wall. This method makes the basement dry and warm, and keeps much of the moisture away from the foundation walls. Before filling the trench on the outside some engineers give the outside of the foundation wall two coats of hot tar to make it impervious to water.

32. Foundation Walls Partly on Rock.—A very faulty construction that is sometimes met with is that in which a portion of a ledge of rock projects into the foundation wall, so that the foundation is built partly on the rock and partly on the footing course. This is shown in Fig. 22, *a* being the footing course; *b*, the rock projecting into the foundation wall; *c*, the thin wall in front of the rock to bring the foundation to the thickness figured on the plans; and *d*, the wall of the building carried up to its full height

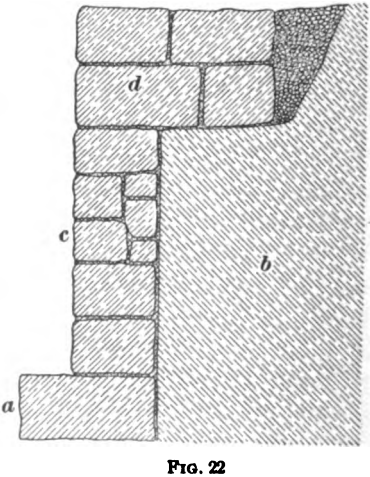

FIG. 22

Digitized by Google

and thickness, and resting partly on the thin wall *c*, and partly on the ledge of rock *b*.

In a wall so built, the water will find its way either through the imperceptible seams of the ledge of rock *b*, or over its top into the body of the masonry, keeping it constantly damp. Besides, there is a serious risk that under the heavy weight of the upper wall, the thin wall built against the ledge—but in no way bonded to it—will separate from it and fall away, leaving the superincumbent masonry most insecurely supported; moreover, a foundation wall, built partly on unyielding rock and partly on softer soil, will settle unequally and crack, perhaps injuring the masonry above, and, at least, opening an inlet for moisture. The ledge should be cut away so as to leave ample space for the whole thickness of the foundation walls down to the footings, with sufficient space between the wall and the ledge of rock for packing gravel, as shown at *a*, Fig. 21. This will intercept the water and carry it away from the wall.

MILL-BASEMENT CONSTRUCTION

33. A very good mill construction in cases where it is desired to obtain room for storage of stock or for mill processes in the basement, consists of excavating the cellar so that the basement floor will be about 5 feet below and the first floor about 7 feet above the surface of the ground. This construction admits of windows in the basement walls and makes a basement that can be utilized for the heavier types of machinery or for dyeing or other wet processes and also for those machines that require a solid foundation on account of vibration. The floor should be cemented; sometimes small, crushed stones or rubble are first laid down and the cement laid on top. The small stones or rubble are often filled with grout.

The pillars in the basement may be of wood if there is a good air circulation, and of iron or brick if the cellar is damp; in any case, care should be taken to have a solid foundation, since these pillars or piers support the entire weight of the floors, machinery, etc. that is above.

Digitized by Google

Fig. 23 shows a mill foundation of this construction; a is a thick bed, or footing, of concrete; b, a footing course of broad building stones; c, a stone foundation wall rising to the surface of the ground, and d, the brick wall of the mill; a_1 is a concrete footing for the brick pier c_1 that rests on a footing stone b_1 supported by the concrete footing. The basement floor is laid with a grouted layer of rubble e over which a cement floor f is laid. Where heavy machinery that

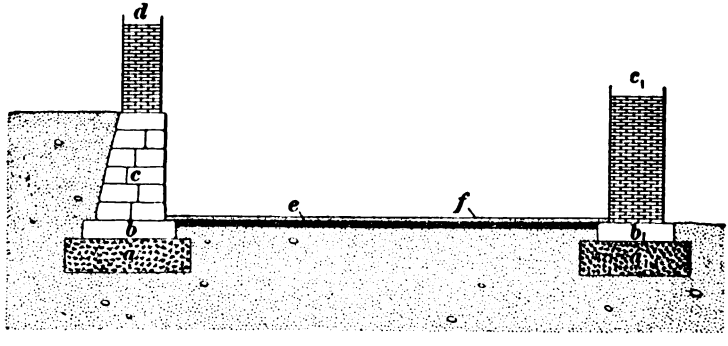

FIG. 23

must be lagged down is to be used in basements, the best practice is to place 8-inch timbers, to which the machinery may be fastened, on a solid foundation, and fill between them with well-rammed stones covered with coal-tar concrete to the level of the top of the timbers. In some cases a board or plank flooring is placed over the whole. It has been found that timbers set too closely confined in cement concrete will rot; therefore, the coal-tar concrete is recommended.

MORTAR

34. All foundation work, whether stone or brick, should be laid in **cement** or **cement-and-lime mortar.** If the soil is wet or damp, cement mortar should be used, but for ordinary purposes cement-and-lime mortar fulfils the requirements. For foundation walls above the ground and for the general wall construction of the mill good lime mortar may be used.

Digitized by Google

35. Cement Mortar.—Cement mortar, if made of Rosendale or any of the ordinary quick-setting, light cements, should be made in the proportion of three parts sand to one part cement; but if made of the heavy, slow-setting cements called Portland cements, may be made with four parts of sand to one part of cement. When mixing cement mortar, it is advisable that these parts should be actually measured in barrels. (It is a common practice with many builders to have one laborer shovel cement or lime, while three or four others are shoveling sand; this is a very unreliable method of measuring.) After the sand and cement are thrown on the platform, they must be thoroughly mixed by being shoveled together, at least twice, so that the cement may be thoroughly incorporated with the sand. (A little lime may be added in winter to prevent freezing.) Sufficient water is then added to make a stiff paste; the mortar must be immediately conveyed to the work and used, as the cement *sets*, or hardens, very rapidly, and when once hardened cannot be used again.

36. Lime Mortar.—Lime mortar is prepared in much the same way as pure cement mortar. A bed of sand is first made in a mortar box, and the lime is distributed as evenly as possible over it, both the lime and sand being first measured in order that the proportion specified may be obtained. The lime should then be slaked, by pouring on water, and covered with a layer of sand, or, preferably, a tarpaulin, to retain the vapor given off while the lime is being converted into hydrates of lime by action of the water; sand is then added, if necessary, until the mortar contains the proper proportions. The proportion of sand to lime usually specified and called for by the New York and Boston building laws, is three parts of sand to one part of lime. If, however, both the materials are of good quality; that is, if the lime slakes freely, becomes a fine, impalpable powder, resembling flour in texture, and perfectly free from foreign matter, and the sand is clean and sharp—one part of lime to four parts of sand is sufficient, but more sand than this is injurious. It is considered good practice to make

Digitized by Google

lime mortar in large quantities, and then leave it in piles for use as it may be needed, after stirring and tempering.

37. Cement-and-Lime Mortar.—For this mortar, the cement, lime, and sand should be well mixed together, before water is added, as described for cement mortar. Cement-and-lime mortar should be used shortly after it has been mixed, before the cement sets.

BRICKWORK ABOVE THE FOUNDATION

BRICKS AND BRICKMAKING

38. The present American practice is to build the walls of the mill above the foundation of bricks laid in lime mortar, although in certain localities where large amounts of suitable stone may be obtained cheaply mills have been constructed of this material.

Bricks may be said to be artificial stones manufactured from a peculiar clay containing protoxide of iron, in regular and uniform shapes for convenience in laying. Other substances that form part of ordinary clay either do no good or are absolutely harmful; carbonate of lime, in any large quantity, renders the clay absolutely unfit for making brick. Sand or silica should not exist in any excessive quantity, as an excess of sand renders the brick too brittle and destroys cohesion; 25 per cent. of sand is considered a good proportion. The protoxide of iron in the clay causes the red color in the brick after burning, the color varying with the proportion of iron.

39. Hand-Made Brick.—Many of the common bricks, especially in the smaller towns and cities, are made by hand. The clay is thrown into a circular pit, where it is mixed with water and tempered with sand or ashes by means of a tempering wheel attached to a long lever and worked by horse-power. When soft and plastic, it is taken to the molding table and pressed into the molds by hand. The molds are dipped either in water (called *slop molding*) or in sand (called

Digitized by Google

dry molding) to prevent the clay from adhering to the mold. The sand-molding process gives cleaner and sharper brick than the slop molding. After the bricks are shaped in the mold, they are laid in the sun or in a drying house for three or four days, after which they are stacked in kilns and *fired*.

40. Machine-made bricks, as their name implies, are made by machinery, the object of which is to facilitate the process of preparing the unburned bricks. There are several systems of preparing machine-made brick, but in general the results obtained by these processes are similar to those obtained by hand.

41. Burning the Brick.—When either the hand- or machine-made processes are used, the bricks, after drying, are built into a large mass, or kiln, containing from 100,000 to 300,000 bricks. *Eyes*, or flues, are left at the bottom as receptacles for fuel. The bricks are laid loosely together in order to allow the heat to pass in and around them. When ready, the fire is started, slowly at first, but afterwards increased to an intense heat; and after burning for a period, determined partly by the fuel used but mainly by experience, the fires are allowed to die out gradually.

The quality of the brick contained in a kiln that has been fired may be divided into four classes: First, the extreme outside brick, which are burnt so little that they are almost worthless. Second, a layer inside the above, in which the brick are underburnt and soft; these are called *pale*, or *salmon*, *brick*, and are unfit for foundation or face work, but are used for filling in between stud partitions, and sometimes between harder brick in the inside of walls, although their use for this purpose is not recommended. Third, a layer consisting of brick well-burned, hard, well shaped, and of a good red color; this brick is good for any purpose. Fourth, the brick in the inner layer and those just above the flues are overburnt, very hard, very brittle, and usually distorted, cracked, and even vitrified; they should not be used in any structure subject to shock, but are often used for paving brick.

Digitized by Google

42. Size of Bricks.—In the United States the size of bricks is not regulated by law, consequently the dimensions vary not only with the maker, but also with the locality. In the New England states, the average size of common brick is about $7\frac{3}{4}$ in. $\times$ $3\frac{3}{4}$ in. $\times$ $2\frac{1}{4}$ in.; New York and New Jersey bricks will run about 8 in. $\times$ 4 in. $\times$ $2\frac{1}{2}$ in., and the walls laid in them will run 8, 12, 16, and 20 inches in thickness for 1, $1\frac{1}{2}$, 2, and $2\frac{1}{2}$ bricks. Most of the Western common bricks measure $8\frac{1}{2}$ in. $\times$ $4\frac{1}{8}$ in. $\times$ $2\frac{1}{2}$ in., and the thickness of the walls measures about 9, 13, 18, and 22 inches for thicknesses of 1, $1\frac{1}{2}$, 2, and $2\frac{1}{2}$ bricks. On the seacoast of some of the Southern States, the bricks are made with a large percentage of sand, and will average 9 in. $\times$ $4\frac{1}{2}$ in. $\times$ 3 in.

43. Strength and Quality of Brick.—Whenever possible, the mill engineer should see that the bricks to be used meet the following requirements:

1. They should be sound, free from cracks or flaws, and from stones and lumps of any kind, especially pieces of lime.

2. They should be uniform in size, with sharp angles and edges, and the surfaces true and square to each other; this insures neat work.

3. Good building brick should be quite hard and well burned. A simple, and generally satisfactory test for common brick is to strike two of them together, or to strike one with the edge of a mason's trowel; if the brick gives a ringing sound it is generally sufficiently strong for any ordinary work. A dull sound shows it to be soft or shaky.

4. A good brick should not absorb more than one-tenth its weight in water. Weigh the brick, immerse it in water for 24 hours, and then weigh it again; from the increase in weight the percentage of water it has absorbed may be found. Very soft, underburned bricks often absorb from 25 to 35 per cent. of water; weak, light-red bricks, often used in filling the interior of walls, will absorb about 20 to 25 per cent.; while the very best brick may absorb not more than 5 per cent., and should, if possible, be used for outside walls and foundation walls and piers.

Digitized by Google

5. Bricks that are to be used for piers and the foundations of heavy buildings should not break under a crushing load of less than 4,000 pounds per square inch.

6. A good brick, 8 inches long, 4 inches wide, and $2\frac{1}{2}$ inches thick, should not break under a center load of less than 1,600 pounds, the brick lying flat, supported at each end only, and having a clear span of 6 inches, and a bearing at each end of 1 inch. A first-class brick will carry 2,250 pounds in the center and not break. Tests have been made with brick that carried 9,700 pounds before breaking.

THICKNESS OF BRICK WALLS

44. Before considering the actual construction of the brick walls of the mill, some attention should be paid to the thickness of walls for mill structures required by law. For this purpose, an extract is given from the building law of New York, relating to the thickness of brick walls in proportion to their height; as the laws of other cities do not vary materially from this, it can safely be taken as a standard.

"The walls of all warehouses, stores, factories, and stables 25 feet or less in width between walls shall not be less than 12 inches thick to the height of 40 feet (see Fig. 24).

"If over 40 feet in height and not over 60 feet, the walls shall not be less than 16 inches thick to the height of 40 feet or to the nearest tier of beams to that height; and thence not less than 12 inches to the top (see Fig. 25).

"If over 60 feet in height and not over 75 feet in height, the walls shall not be less than 20 inches to the height of 25 feet or to the nearest tier of beams to that height; and thence not less than 16 inches thick to the top (see Fig. 26).

"If over 75 feet in height and not over 85 feet in height, the walls shall not be less than 24 inches thick to the height of 20 feet, or to the nearest tier of beams to that height; thence not less than 20 inches thick to the height of 60 feet, or to the nearest tier of beams to that height; and thence not less than 16 inches thick to the top (see Fig. 27).

"If over 85 feet in height and not over 100 feet in height, the walls shall not be less than 28 inches thick to the

Digitized by Google

height of 25 feet, or to the nearest tier of beams to that height; thence not less than 24 inches thick to the height of 50 feet, or to the nearest tier of beams to that height; thence not less than 20 inches thick to the height of 75 feet, or to the nearest tier of beams to that height; and thence not less than 16 inches to the top (see Fig. 28).

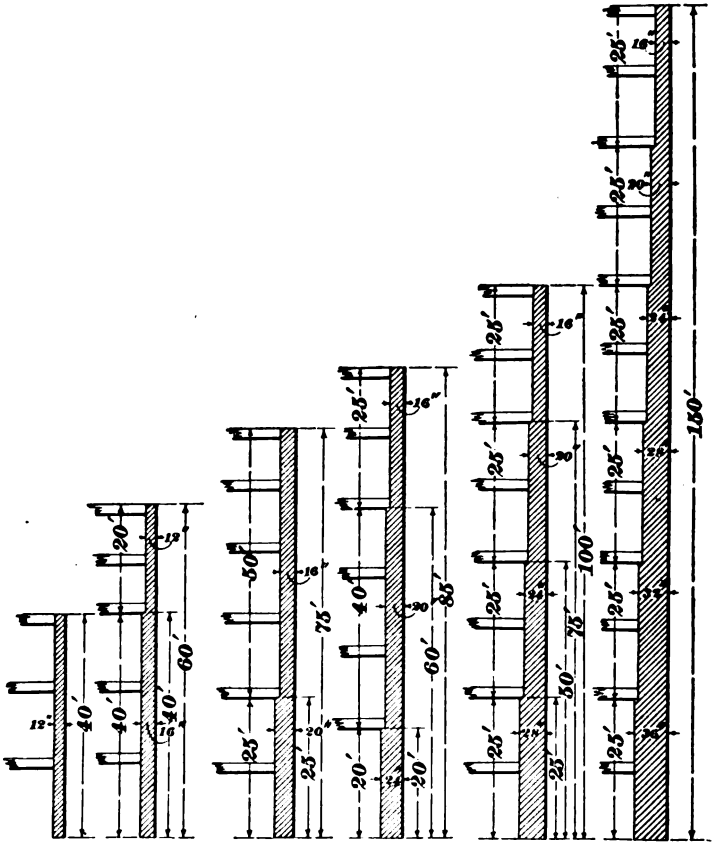

FIG 24 FIG. 25 FIG. 26 FIG. 27 FIG. 28 FIG. 29

"If over 100 feet in height, each additional 25 feet in height, or part thereof, next above the curb, shall be increased 4 inches in thickness, the upper 100 feet of wall remaining the same as specified for a wall of that height (see Fig. 29).

Digitized by Google

"If there is to be a clear span of over 25 feet between walls, the bearing walls shall be 4 inches more in thickness than is

TABLE III

THICKNESS OF MILL WALLS IN INCHES

Height of Building	City	Stories				
		First	Second	Third	Fourth	Fifth
Two stories	Boston . .	16	12			
	New York .	12	12			
	Chicago . .	12	12			
	Minneapolis	12	12			
	Memphis .	18	13			
	Denver . .	13	13			
Three stories	Boston . .	20	16	16		
	New York .	16	16	12		
	Chicago . .	16	12	12		
	Minneapolis	16	12	12		
	Memphis .	22½	18	13		
	Denver . .	17	13	13		
Four stories	Boston .	20	16	16	16	
	New York .	16	16	16	12	
	Chicago . .	20	16	16	12	
	Minneapolis	16	16	12	12	
	Memphis .	27	22½	18	13	
	Denver . .	21	17	13	13	
Five stories	Boston . .	20	20	20	20	16
	New York .	20	16	16	16	16
	Chicago . .	20	20	16	16	16
	Minneapolis	20	16	16	12	12
	Memphis .	31½	27	22½	18	13
	Denver . .	21	21	17	17	13

heretofore specified, for every 12½ feet, or fraction thereof, that said walls are more than 25 feet apart."

Digitized by Google

Table III gives the thickness of walls, in inches, required by law for mills, in the six cities mentioned.

The tops of the second-floor beams are taken as 19 feet above the surface of the ground, and the heights of the other stories are 13 feet 4 inches, including thickness of floors, as the New York and Boston laws give the height of the wall in feet and not in stories. The Chicago ordinances provide that the maximum heights of stories, in accordance with the thicknesses given in Table III, are 18 feet in the first, 15 feet in the second, 13 feet 6 inches in the third, and 12 feet above.

As the weight of textile machinery and the high speeds at which it is run has a tendency to produce an excessive vibration, the walls of textile mills are frequently made thicker than is required by the building laws. At times also large amounts of raw stock and finished goods are carried, so that the weight supported, per square foot of floor area, is probably greatly in excess of that in many other industries. Thus, a four-story textile mill intended to carry a large amount of machinery and stock might have walls 28, 24, 20, and 16 inches thick at each respective story. If the mill is to be extremely wide, the walls should be made 4 inches thicker at each story.

BRICKLAYING

45. To build any kind of a brick structure, so as to make a strong and durable piece of work, it is necessary to have a bed of mortar between the bricks; brickwork consists, therefore, of both bricks and mortar. The strength and durability of any piece of work will depend on the quality of the brick, the strength and quality of the mortar, the way in which the bricks are laid and bonded, and whether or not the bricks are wet or dry when laid.

The function of the mortar in brickwork is threefold: (1) To keep out moisture and, by filling all crevices, to prevent as far as possible excessive changes in temperature; (2) to unite the bricks into one mass; (3) to form a cushion to fill up any irregularities in the brick, and distribute the

Digitized by Google

pressure evenly. The first object is best attained by grouting, or thoroughly flushing, the work; the second depends largely on the strength of the mortar; and the third is effected chiefly by the thickness of the joints.

Common brick should be laid in a bed of mortar at least $\frac{3}{16}$, and not more than $\frac{3}{8}$, inch thick. Every joint and space in the walls not occupied by other material should be filled with mortar. The best way to allow for the thickness of the mortar joint is to measure the height of eight courses of brick in the wall; this should not be more than 2 inches greater than eight tiers of the same brick laid dry, that is, without mortar. A *course* is a horizontal row of bricks plus the thickness of the mortar joint. As common brick is usually quite rough and uneven, it is not always easy to determine the thickness of a single joint, but the variations from the above rule, in any eight courses that may be selected, should be very slight.

46. The best method of building a brick wall in which each course consists of two outside courses and one inside, is as follows: The two outside courses are laid in mortar, spread with a trowel so as to form a bed for the brick to lie on. The bricks in each outside course are laid up against the last ones previously laid in that course after some mortar has been scraped against their adjoining sides. The brick to be laid is pressed into its place with a sliding motion, which forces the mortar to completely fill the joint. Having continued the outside courses of brick to an angle or opening, the space between the bricks should be filled with a bed of soft mortar, and the bricks of the inside course pressed into this mortar with a downward slanting motion, so as to press the mortar up into the joints; this method of laying is called *shoving*. If the mortar is not too stiff, and is thrown into the space between the inner and outer courses of brick with some force, it will completely fill the upper part of the joints in the inner course, previously laid, which were not filled by the shoving process. A brick wall laid in this way will be very strong and difficult to break down.

Digitized by Google

Another method of laying in the brick between the inside and outside courses in a wall is to spread a bed of mortar, and on this lay the dry brick. If the bricks are laid with open joints and thoroughly slushed up with mortar, it makes good work; but unless the workmen are carefully watched, the joints do not get filled with mortar, and the wall will not be as strong as when the bricks are *shoved*.

Some bricklayers lay the inside courses dry on a bed of mortar, as described in a previous paragraph, and then fill all the joints with very thin mortar; this is called *grouting*. No more mortar should be used than will fill all the joints. This method is not as good as the others because the thin mortar lacks cohesion, and does not bind the brick together as well as does stiffer and more tenacious mortar. Grouting should never be done in freezing weather; the mortar contains so much water that it freezes very readily and is then useless as a bond.

Bricks should be laid as clean as possible, and for well-appearing work the most nearly perfect and best-colored bricks should be reserved for the outside work. For the inside of the walls the color is not so important, but all unburnt, unsound, or badly misshaped bricks should be rejected.

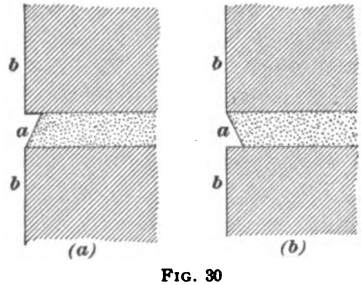

FIG. 30

47. Joints in Brickwork.—For inside walls that are to be plastered, the mortar projecting from the joints is merely cut off flush with the trowel. All outside and inside walls, where the bricks are left exposed, should have the joints *struck*, as shown in Fig. 30 (*a*), where *a* shows the mortar joint, and *b* the bricks in the wall. This *striking* the joint is done with the point of the trowel, which is held obliquely. This method makes the best job for outside work, as the water will not lodge in the joint and soak into the mortar, as it will when the joint is struck as shown in Fig. 30 (*b*). The second form, however, is easier to make.

Digitized by Google

For particular outside work where it is desired to give the walls a more finished appearance the joints instead of being struck are *jointed*. This is done as fast as a few courses are laid, with a blunt instrument known as a jointer, which is drawn along the joints, smoothing and slightly concaving the mortar.

48. Bricklaying in Extremely Hot or Cold Weather. Mortar, unless very thin, will not adhere to a dry, porous brick, because the brick robs the mortar of its moisture and therefore prevents the proper setting. On this account, bricks should never be laid dry, and in very hot, dry weather should be as wet as possible. When porous bricks are used this is of great importance in obtaining a strong wall. However, when the weather is not extremely hot, care should be taken not to make the bricks too wet, or they will keep the mortar soft and the increasing weight of the wall, as it is built, will be apt to throw it out of true. During long, wet periods the piles of bricks should be covered with boards or canvas in order to keep them from being soaked with water.

Brickwork should never be laid in lime mortar when the thermometer is below 32°, as freezing lime mortar unfits it for useful purposes, and work can never be done as economically in cold weather as at other times. Lime mortar is damaged when it alternately freezes and thaws. The sun shining on one side of the wall may cause the mortar to soften, while that on the other side will be frozen; this may cause serious damage by causing the wall to buckle. In constructing large buildings in winter, if one-fifth cement is added to the lime mortar, it will not be damaged by freezing. The surface of the bricks must be clean and free from frost, snow, and ice, when they are laid, or the mortar will not adhere to them.

Sometimes salt is mixed with the mortar to prevent it from freezing, but it is undesirable, as it usually causes *efflorescence*, or the white deposit often seen spread over a wall.

Portland cement mortar and Portland cement-and-lime mortars are not affected by changes in temperature.

Digitized by Google

BOND IN BRICKWORK

49. The proper construction of a brick wall involves many things besides the mere laying of one brick on top of another, with a bed of mortar between.

All corners and joints should be carefully plumbed, the courses of brickwork kept perfectly horizontal, which necessitates uniform mortar joints; the wall surfaces, both exterior and interior, must be kept in perfect alinement; and all walls must be carried up approximately together. All these conditions may be complied with, and yet the work may be imperfect; the merit of the brickwork must be judged by the thoroughness of its bond, both lengthwise and crosswise. This bond must be maintained by having every course perfectly horizontal, both longitudinally and transversely, as well as perfectly plumb. Aside from the quality and character of the material, the *bonding* of a wall contributes most of its strength.

50. **Bond,** in brickwork, is the arrangement of the bricks in such a way as to tie together all parts of the wall by means of the weight resting on the bricks, as well as by the adhesion of the mortar; and also for distributing the effects of the weight over an increased area. When the bricks are placed lengthwise on the face of the wall, as at *a*, Fig. 31, they are termed *stretchers;* when placed crosswise and their ends only exposed to view in the face of the wall, as at *b*, they are called *headers.* Bricks laid with their long axes in the direction of the length of the wall, or stretcher bricks, give the wall strength in the direction of its length, while header bricks, or those with their long axes laid across the wall, give it strength in a transverse direction.

To obtain the best results in bonding throughout the mass of the wall, strict attention must be given to the location of every joint in the brickwork. On the face of the wall, the vertical joints in each course throughout the height should be kept perpendicular, or directly over those in the second course below; this is called *keeping the perpends.* Unless the

Digitized by Google

closest attention is paid, the lap is ultimately lost through irregularity of the brick and mortar joints, and extra *bats*, or *closers*, are necessary. The joints across the top of the wall should be kept in line, so that if the *perpends* are observed on one face of the wall, the other face will also work up correctly. Even when the wall is exposed only on one face, it is just as essential to have the joints on top of the wall kept in line, as otherwise its effective longitudinal bond will soon be lost, since at best the heading bond furnishes a lap of only 2 inches.

The importance of having the bond preserved in the whole wall can be understood by reference to Fig. 31, which repre-

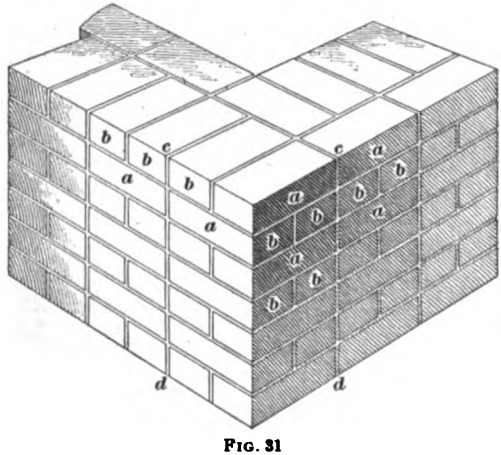

FIG. 31

sents a section of a wall consisting of alternate courses of stretchers and headers. By placing the brick as shown, no longitudinal bond exists and the wall is simply a series of isolated piers that join each other at the vertical lines *c d* and have no bond or union between them other than that obtained by the adhesion of the mortar. This method manifestly lacks strength and efficiency. In order to overcome this difficulty, and to secure a continuous bond in the length of the wall, recourse is had to a different arrangement of the bricks and to the use of blocks that vary in size from the ordinary brick. These blocks are called *closers*, the term

Digitized by Google

meaning that they perfectly finish or close the length of the courses that have been adjusted to obtain the bond. The vertical joint that is shown at *c d*, Fig. 31, is avoided and no two adjacent courses have joints that are immediately over each other. The closers are made by cutting the bricks with a smart blow with the edge of the steel trowel into such blocks as the situation requires; these are called *bats* and are designated according to the proportion they bear to the whole brick.

51. The different bats, or closers, used in brickwork are shown in Fig. 32; (*a*) represents a whole brick of the usual size. When the brick is cut longitudinally on line *a b*, as

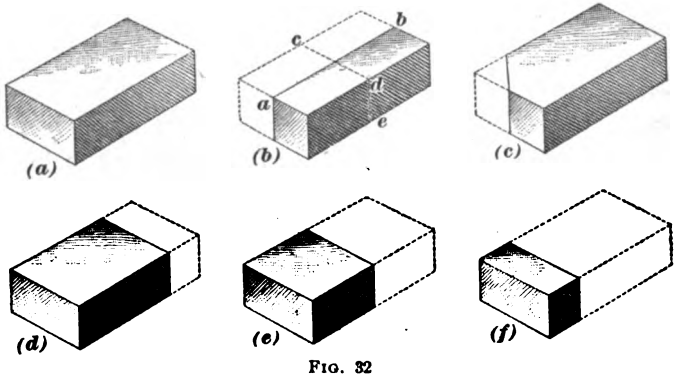

FIG. 32

at (*b*), each half is called a *queen closer;* but as it is difficult to cut the full length in this manner, the usual mode is first to cut the brick on the line *c d*, and then to cut each half on the line *a b*. When the brick is cut as at (*c*), it is called a *king closer*, and is a form well adapted for closers at door and window jambs, etc. When one-fourth of the whole length of the brick is cut off, as at (*d*), the remainder is called a *three-quarter bat;* and in like manner the portion remaining, as in (*e*), is called a *half bat;* and at (*f*), a *quarter bat.*

There are several methods of placing the bricks in the wall when closers are used to properly secure the lap, each method having its own name to indicate the kind of bond used. Assuming the wall to have the properties of a column,

Digitized by Google

its bearing capacity will necessarily depend on the strength of its least dimension, which is its thickness, so that the bond that secures a thorough union of the constituent parts in this direction will always be the most desirable.

52. Heading Bond.—When all the courses present the ends of the bricks in the face of the wall, the wall will then be composed entirely of headers; this method, however, is only adapted for use in sharp-curved walls, as it possesses little longitudinal bond.

53. Stretching Bond.—When all the courses consist of stretchers, the wall formed should only be used for partitions that are but 4 inches in thickness; where the wall is thicker

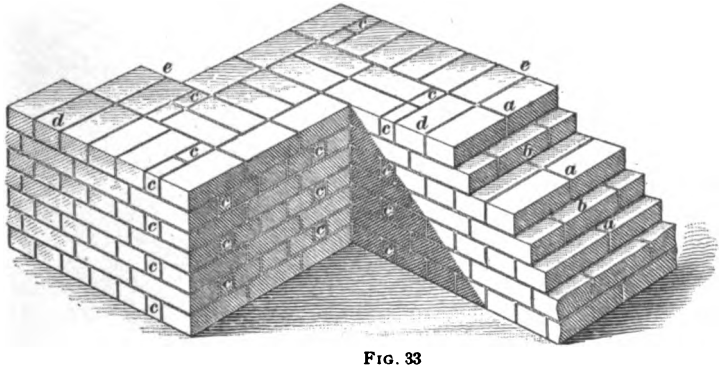

FIG. 33

than this, the method cannot be followed, as there will be no transverse bond whatever.

54. English Bond.—Though not much used in this country, this is probably the best and strongest method of bricklaying. A wall bonded by this system shows header and stretcher courses alternately, as shown in Fig. 33. The longitudinal bond is obtained by the use of quarter-bat closers *c* placed in alternate courses, as shown. This is without doubt the best and simplest method to follow in all work where strength is required, as by its use a complete and thorough transverse bond is procured. The heart of the wall consists entirely of heading bond, and the joints of the

Digitized by Google

heading course, as at *a*, are well bonded by the headers of the stretching course as at *b*. The English bond can also be accomplished by the use of the three-quarter bats, and many authorities prefer them to quarter-bat closers, as by using three-quarter bats only one mortar joint is required in place of two.

An objection frequently urged against the appearance of the English bond on the face of the wall, is the recurrence of so many headers, which give the work the appearance of being constructed of so many tile-like blocks. The use of diminutive blocks of either brick or stone, in heavy walls, always tends to reduce the apparent strength of the structure, and it loses much of the effect of permanence, a very effective factor in good design.

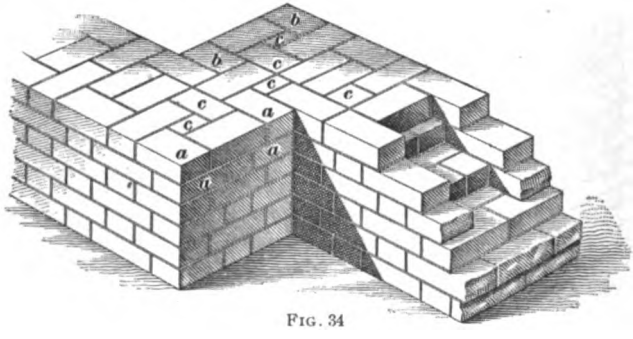

FIG. 34

55. The **Flemish bond** is used to overcome this belittling effect, as only two-thirds of the number of headers that occur in English bond are exposed, and each course is composed of a header and stretcher alternately. The method of laying brick in Flemish bond is shown in Fig. 34. The lap is obtained by the use of three-quarter bats, both at the external and internal angles of the wall, as shown at *a* on the external, and at *b* on the internal angles. The closers occur in the heart of the wall and are quarter, half, and three-quarter bats, as shown at *c*.

Owing to the headers and stretchers being placed on the inner side of the wall immediately opposite those on the outer face, both faces will appear exactly alike when thus

Digitized by Google

arranged; the wall is then said to be built in *double Flemish bond.* Fig. 34 shows that only one-half of the body of the 4-inch thickness is bonded to the adjacent thickness; in other words, the upper bed of each face stretcher is only bound to the inner thickness by means of the width of one header; in this respect, the strength of wall is sacrificed for the sake of appearance. A vertical strip 2 inches wide occurs on each side of the face headers, that has no bond other than that of the adhesion of the mortar. To obviate this defect, the outer face is sometimes built in Flemish bond and the inner face in English bond.

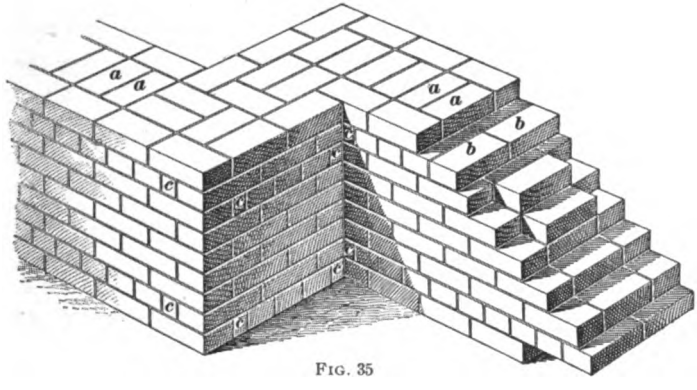

FIG. 35

56. Garden, or Running, Bond.—The bond most generally used in the United States is shown in Fig. 35. It enables the bricklayer to build a larger amount of wall in a given time than can be accomplished by the use of either the English or Flemish bond and is sometimes called *American bond.* It consists in laying from five to seven courses in height as stretchers, bonding with a row of headers at regular intervals. The longitudinal lap is secured by closers *c*, *c*; the heading course in the heart of the wall is shown at *a*, *a*, and bonds the heading course *b*, *b* exposed on the face. This is known as **garden,** or **running, bond.** Its principal defect is that the wall is practically composed of a series of 4-inch slices from $12\frac{1}{2}$ to $17\frac{1}{2}$ inches in height, that ordinarily have no transverse bond other than the

Digitized by Google

mortar. It fulfils the requirements, however, if every joint throughout the body of the wall is well filled with good mortar, the vertical joints being well rammed with the edge of the trowel.

In mill structures it is customary to make every fifth or seventh course a header, or bonding, course, the former method making the stronger wall and the latter the quicker to build.

CARRYING UP THE WALLS

57. It is very important that the walls of a building should be carried up as evenly as possible, no wall being built more than 3 feet above the rest unless separated by an opening. If one part of a wall is built up ahead of another, unequal settlement is produced. The joints in the brickwork of the higher part will have set before the remainder has been added, consequently the work laid last is very likely to settle away from the other. This not only weakens the wall, but also mars its appearance. If it is absolutely necessary to carry one part of a wall higher than the rest, the end of the high part should be stepped, or *racked back*, and not run up vertically, with only toothings left to connect it with the rest of the work.

JOINING NEW WALLS TO OLD

58. In joining a new wall to an old, when the walls come at right angles, the new work should not be toothed or bonded into the old work, unless the new work is laid in cement mortar. All masonwork built with lime mortar will settle somewhat, owing to a slight compression of the mortar joints, and this settlement is apt to cause a crack where old and new work are bonded together. In place of toothing, or bonding, a groove should be cut perpendicularly in the old wall, usually the width of a brick, to make what is called a *slip joint*. This method of bonding is shown in Fig. 36; *a* is the groove, or chase cut, where the new wall is to enter in the old wall; *c* is the new wall, and *d* the old wall. The new wall has a series of bricks *b* that fit into the slot *a*,

Digitized by Google

In cheap construction, where new work is bonded into old, the method most commonly used is to nail a piece of $2'' \times 4''$ timber against the wall, as shown in Fig. 37, where *a* shows the $2'' \times 4''$ timber spiked to the old wall, and entering the center of the new wall; at *b* is shown the old, and at *c* the new wall.

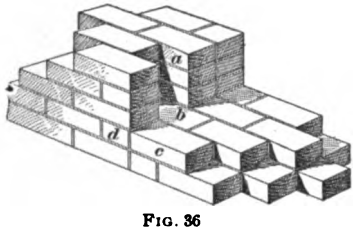

FIG. 36

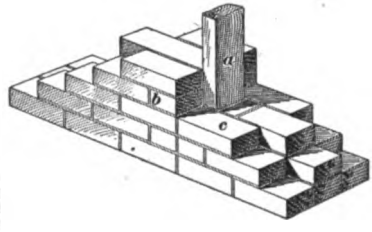

FIG. 37

The average settlement of brick walls where the foundation is stable and the mortar good is 1 inch in from 40 to 60 feet, or as some engineers reckon $\frac{1}{4}$ inch to the story. If a wall is built rapidly the settlement will be found to be much greater than if it is built slowly, since the weight is then put on the mortar before it has time to set.

OPENINGS IN BRICK WALLS

59. Openings for windows and doorways should be built into the walls where required. For their corners round-cornered bricks, or those molded with one corner rounded off, are appropriate, since they are not so easily defaced as square-cornered bricks. Segmental arches should be turned over the window frames and generally over doorways, although occasionally semicircular arches are used for doorways and other large openings. The two forms of arches used over the windows of mill structures are the *rowlock* and the *bonded arch*. In the **rowlock arch,** shown in Fig. 38, each course of bricks is turned independently, while in the **bonded arch,** shown in Fig. 39, the two courses are bonded together. The bonded arch is considered the stronger, but the rowlock arch is generally used as it is

Digitized by Google

sufficiently strong for mill purposes and has the additional advantage of being easier to lay.

Arches should be laid with close joints, or the shrinkage of the mortar will cause the arch to crack and perhaps in extreme cases to drop out. They should not be laid too flat, or they will crack, especially if laid with thick joints.

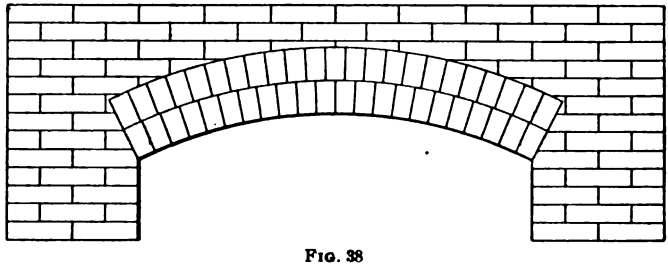

FIG. 38

The rise of any large arch should be at least one-sixth of the length of the span. It is laid with a center, or framework, that supports it while being laid, and which should not be removed, or *struck*, until the weight of the masonry above has been added.

A large arch with light abutment walls, that is, walls at each side, is liable to spread and crack. This may be pre-

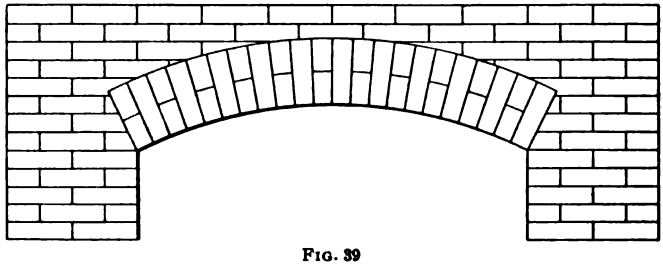

FIG. 39

vented by embedding an iron rod, with a plate attached to each end, in the brickwork just above the arch. The use of iron in brickwork should be limited, however, not only because of the danger of its rusting, but also because the expansion of the iron pieces, when heated, is liable to crack the walls.

Digitized by Google

BRICK PIERS

60. Brick piers are built in the same manner as brick walls. When less than 3 feet square and supporting a beam, girder, arch, column, or lintel carrying a wall, they should contain bond stones at least 4 inches thick, or cast-iron plates of sufficient strength and the full size of the piers, at least every 30 inches in height. In height, isolated brick piers should not exceed twelve times their least square dimension. The

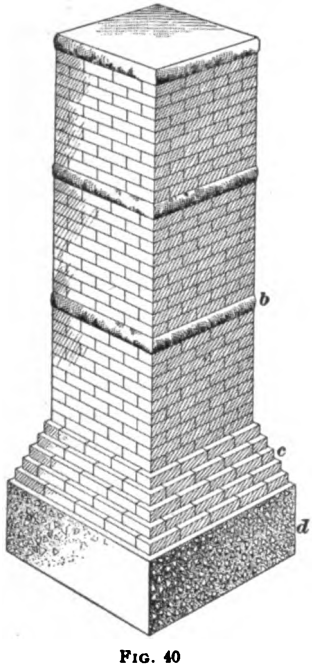

FIG. 40

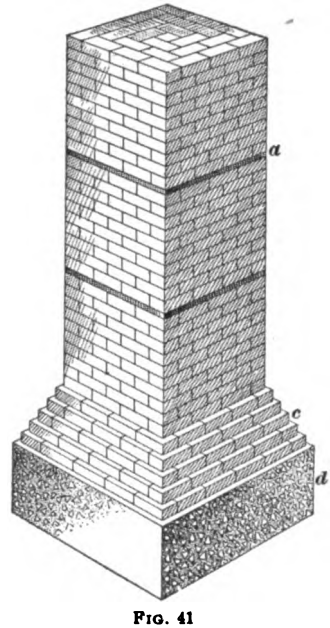

FIG. 41

object of bonding a pier carrying a heavy weight is to distribute the load over the whole area, thereby causing it to bear equally on each brick used in the construction. The bond stones should be either granite, bluestone, or one of the durable limestones. The blue Vermont marble is also used, but the softer sandstones and freestones should be avoided.

Digitized by Google

Fig. 40 shows a pier bonded with 4-inch bond stones *b*, a stepped-up brick foundation at *c*, and a concrete footing at *d*. Fig. 41 shows a brick pier with 1-inch iron bonding plates at *a*, and stepped up brick foundation and concrete footing at *c* and *d*.

FIRE-WALLS

61. Fire-walls are brick interior walls arranged to separate portions of the mill in which processes involving a greater risk of fire are carried on, from other portions of the mill. They should be carried down to secure foundations like the other walls of the mill and carried up through the roof, so as absolutely to intercept the progress of a fire and prevent its spreading and destroying the entire plant. They should contain as few openings as possible, and these should be thoroughly protected with automatic fire-doors, the construction of which will be explained later.

CHIMNEYS

62. If the boiler plant of the mill is to be equipped with forced- or induced-draft appliances, a comparatively short stack will suffice to carry off the smoke and gases incidental to the combustion of fuel beneath the boilers. If, however, natural draft is to be relied on, a **chimney** of sufficient height to insure the combustion of the fuel will be required. Iron stacks are occasionally used, but brick chimneys are to be preferred, since they are more stable and retain the heat of the gases to a greater extent, thereby increasing the draft of the flue. The footing for a brick chimney should consist of a bed of well-rammed concrete, at least 3 feet thick, of sufficient area to safely support the structure; this area will vary according to the size of the chimney and the character of the soil on which it rests. The foundation of the chimney may be either stone or stepped brickwork laid in cement mortar and resting on the concrete footing. The chimney should be built tapering and the top provided with an iron cap to prevent moisture from working into the brickwork

Digitized by Google

and to prevent the topmost bricks from becoming loose and being blown off. A round chimney is to be preferred as it has only 55 per cent. of the wind pressure that a square chimney is subjected to and costs but little more to build. Fig. 42 (*a*) shows an elevation of a 106-foot chimney, while Fig. 42 (*b*) is a section showing the proportions of the brickwork and the diameter of the flue: *a* is a bed of concrete on which the foundation *b* is built; *c* is the outside wall of the chimney; *d*, the flue; *e*, an iron cap; and *f*, the opening at the bottom, which is connected with the boiler by an iron pipe.

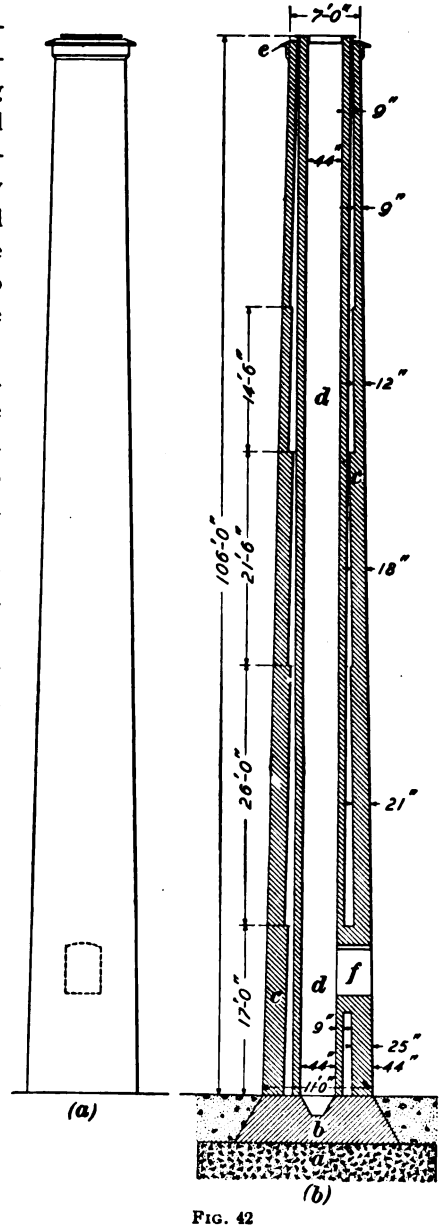

FIG. 42

MEASURING BRICKWORK

63. The method of measuring brickwork usually followed is by the thousand bricks as laid in the wall. Most mason contractors, in estimating on the cost of brickwork, take the entire superficial area of

Digitized by Google

the wall in square feet, measuring it on the outside of the wall, so that the angles are taken twice. This is done to allow for the extra labor in laying up the angles. The bricks are then computed as laying $7\frac{1}{2}$ bricks to the square foot for a 4- or $4\frac{1}{2}$-inch wall, 15 for an 8- or 9-inch wall, $22\frac{1}{2}$ for a 12-inch wall, 30 for a 16-inch wall, and so on, adding $7\frac{1}{2}$ bricks per square foot for every additional thickness of 4-inch wall.

These figures apply to the Eastern and New England states. In the West and South, the bricks are larger, and give from one-quarter to one-third less bricks per square foot in the wall than in the East, and the price is regulated accordingly. In some parts of the West and South two measurements are used; the first, or *kiln count*, represents the actual number of bricks purchased and used, while the second, or *wall measure*, designates the number of brick in the wall, estimating $22\frac{1}{2}$ bricks to every superficial foot of 12-inch wall.

Among some builders the custom prevails to reduce all brickwork to cubic feet and estimate in that way; as for example, a wall 24 feet long, 12 feet high, and 20 inches thick will contain 24 feet $\times$ 12 feet $\times$ 1 foot 8 inches = 480 cubic feet, at $22\frac{1}{2}$ bricks per cubic foot equals 10,800 bricks.

When estimating the amount of brick required for a mill, from 2 to 3 per cent. should be added for outside walls; on inside work, or other work where many bricks must be broken, from 4 to 5 per cent. should be added, in order that no shortage will be occasioned by bricks that should be rejected.

A first-class mason well tended, that is, well supplied with brick and mortar, should easily lay from 1,000 to 1,200 bricks per day on outside work, and on inside work, or as it is sometimes known *backing-up* or *filling-in*, from 1,500 to 2,000 bricks. On less particular work, such as the massive work necessary for engine beds, etc., a good mason will often lay 3,000 and even 4,000 bricks per day of 8 hours. The weight of brickwork laid as explained is about 125 pounds to the cubic foot.

Digitized by Google

Where the size of the structure being built is sufficient to warrant it, a brickwork inspector, preferably a practical mason, should be employed to inspect all brickwork and see that it is properly laid. Of course on small buildings this is not practical and the engineer must keep an eye on this himself.

STONE TRIMMINGS

64. In all structures, a certain amount of stone is laid in connection with the brickwork. In mills this stonework is ordinarily confined to door and window sills, steps, and other minor parts, and is known as **stone trimmings.** Window sills, especially, should be a single stone let into the wall 3 or 4 inches on each side and extending under the window frame far enough to prevent water from working into the wall. If the window sill is made of brick, the rain water will soak into the wall and weaken it. If of cut stone, window sills should have a bevel, or wash, to throw the water from the wall; if a window sill is simply quarry-faced, it should be set so as to utilize whatever natural bevel there is to the stone. All stone should be laid in cement mortar.

Granite is the best stone to use in mill work, and as economy and an appearance of solidity are desired, it should not be too smoothly finished. For steps and door sills six-cut work is often used, while window sills are appropriate if simply quarry-faced. Occasionally a date stone or keystone for a large arch must have a smooth surface, in which case a ten-cut stone should be used.

The terms *quarry-faced*, *four-cut*, *six-cut*, etc. when applied to stone work refer to the method of cutting and finishing the stone. A **quarry-faced stone** is one that is left rough, just as it comes from the quarry. Sometimes the edges of the stone are pitched off to a line. Quarry-faced stones are also called *rock-faced* and *pitch-faced* work. The terms **four-cut, six-cut, eight-cut,** etc. indicate the degrees of smoothness of the face of a stone obtained by hammering and other finishing processes. A six-cut stone is smoother than a four-cut stone, and an eight-cut stone has a finer surface than a six-cut stone, etc.

Digitized by Google

It is not recommended that granite lintels be used over windows and doorways, as brick arches are a much better construction for mill purposes and more efficient where the weight of the wall above is to be supported. The different qualities of granite vary somewhat in hardness, but as the cost of cutting depends on the hardness, it is unwise to select stone any harder than is necessary. All granite, some kinds to a greater extent than others, has a tendency when exposed to heat and water to flake off, or *exfoliate*. Occasionally a granite bond is run entirely around the mill, either at the ground level or at the level of the first or second story, the wall being offset from the outside instead of from the inside to form a ledge for the stones to rest on. This of course is a little different from the ordinary mill construction, where the walls are perpendicular on the outside, and is done for purely ornamental purposes.

INTERIOR CONSTRUCTION

SLOW-BURNING CONSTRUCTION

65. Ordinarily in the interior construction of a building a large number of small pieces, such as floor timbers, studs, braces, etc. are used, which burn rapidly and fiercely when once a fire is started, while the spaces between the beams and studs form flues that give draft to the fire and rapidly spread it throughout the structure. In a mill constructed in this manner a fire rapidly consumes the floors and allows the heavy machinery to crash to the basement and destroy the whole structure. To avoid this destruction modern mills are constructed on what is known as the **slow-burning construction.**

The fundamental principle of this construction is the omission or alteration of every detail that would tend to make combustion rapid or easy. The beams, columns, etc. are so proportioned that they retain strength enough to do the work required of them even after one-third of their bulk has been charred or burned. Instead of a large number of small pieces, a small number of very large pieces are used.

Digitized by Google

The ultimate objects of this construction may be summed up as follows: To make the mill strong enough to stand any ordinary stress, even after its timbers are partly burned; to make the floor so tight and strong that when a fire starts in one story, the water poured in to quench it will not run through and ruin goods on the floor below; to avoid any corners, pockets, or flues where a fire could get started without being immediately discovered; and, above all, to provide a building where every part is easily accessible and a fire can be attacked and extinguished at close quarters without flooding the entire structure.

66. The details of this construction can best be understood by referring to Fig. 43, which is a perspective view of a portion of a two-story mill with a basement constructed on the slow-burning principle. In this figure, *a* is the stone foundation wall and *b* the brick walls of the mill. Brick piers a_1 support the first-floor timbers *c*, which are 12″ × 16″ Georgia pine. Resting on each pier is a cast-iron pintle *d* that supports a 10-inch, round, Georgia pine column *e* that carries the second-floor timbers *f*. Placed on each column *e* is an iron cap on which rests a pintle d_1 that supports a column e_1 that carries the roof timbers *g*. The outside ends of the floor and roof timbers are supported by the brick walls of the mill.

In mill work the *span*, or distance between the walls and columns or between the centers of the columns measured across the mill, is usually 25 feet or thereabouts, while the *bay*, or distance between the centers of the piers or columns measured lengthwise of the mill, is usually 8, 10, or 12 feet, although the latter is unusual. The construction of the mill is spoken of as an 8-foot bay or a 10-foot bay construction, etc.

Sometimes the floor timbers vary in size, becoming smaller at each story, but as a general rule it is better to make the floor and roof timbers the same size throughout the mill. The same is true of the columns, which are sometimes made of a smaller diameter in the top stories than in the lower.

Digitized by Google

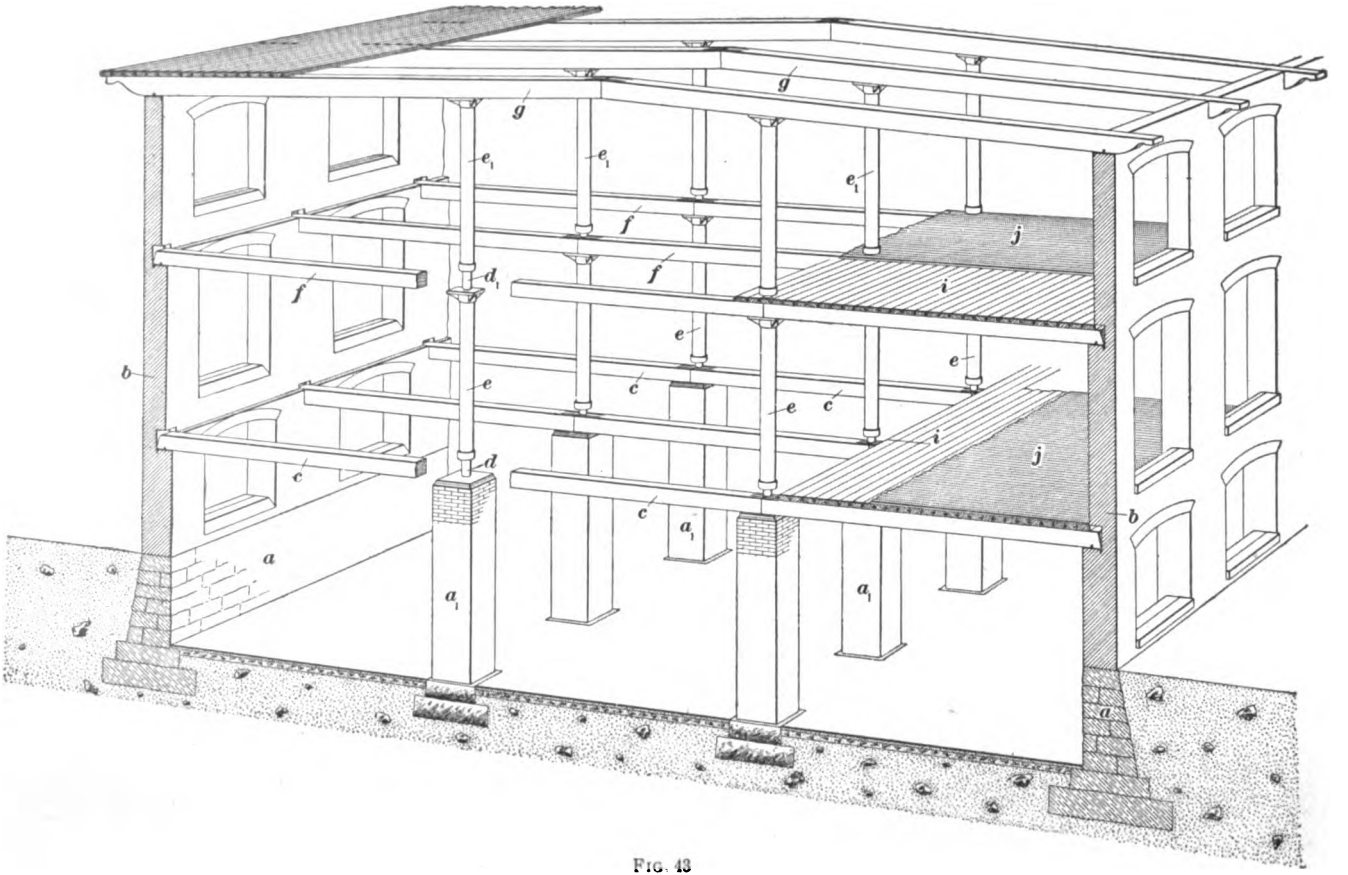

FIG. 43

Digitized by Google

67. Floor Work.—The floors of a mill are supported by wooden or iron columns, or in the case of the first floor usually by brick piers. Fig. 44 shows the method of supporting the first-floor timbers on a brick pier a_1. A base d_3, in which the column e that supports the second-floor timbers rests, is cast in one piece with a pintle d that rests on an iron plate or cap d_2 placed on the pier. As the pintle d is shaped like a cross, the floor timbers c, c are fashioned to fit around it. Occasionally a round pintle having a hole through the center is used, in which case a half-round groove is made in the end of each floor timber. In order to hold the floor timbers firmly together and to preserve the continuity of the bond between the two walls of the mill, they are fastened together by means of dogs k; these are made of $\frac{3}{4}$- or 1-inch wrought iron and are about 2 feet long after bending, each end being turned up, nearly, but not quite, at right angles to the bar. The bent ends are driven into holes in the tops of the timbers, and since they are bent not quite at right angles, draw the timbers together as they are driven in. The bent portion of the dog is usually from 2 to 3 inches in length, and holes of corresponding depth are bored in the floor timbers. Two of these dogs are generally used at each junction of the floor timbers, one being placed on each side of the pintle.

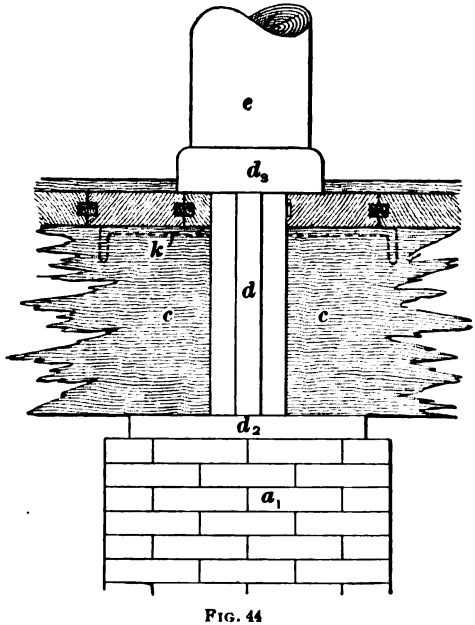

FIG. 44

Digitized by Google

Fig. 45 shows the method of supporting the floor timbers by means of a wooden column. The column e_1 that supports the floor above, or the roof, rests in a base d_3 that is cast in one piece with the pintle d_1 that rests on a cap d_2 placed on the column e. The pintle shown in Fig. 45 is round in section, while that shown in Fig. 44 is cross-shaped in section. The floor timbers f, f rest on the cap d_2 and are bonded together by dogs k, k, as in the previous instance.

The ends of the floor timbers that are laid into the walls of the mill are beveled off and rest on an iron anchor h built into

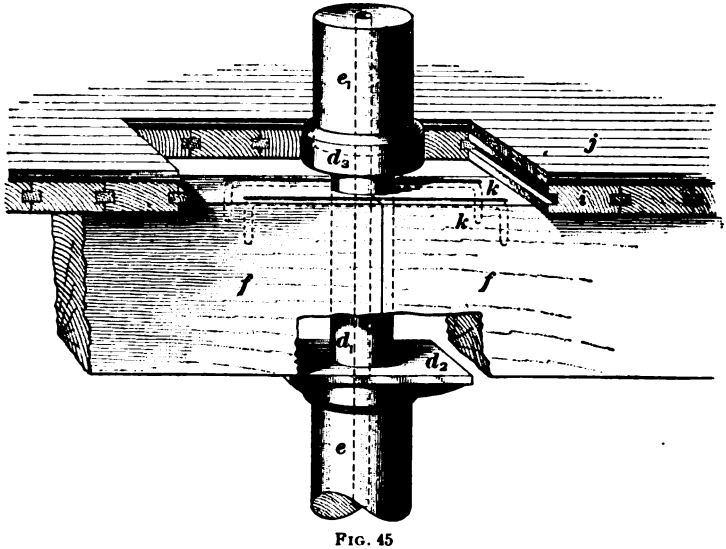

FIG. 45

the brickwork, as shown in Fig. 46. This anchor has a projecting flange extending into the brickwork and a flange that engages with a groove cut in the bottom of the floor timber. This groove is sometimes wide enough for a wedge to be driven in between the side of the groove and the projecting flange to bind the timber tight, but this is not always done. This projecting flange serves to anchor, or tie, the timber to the wall; and as the timbers are tied together by iron dogs, the walls of the mill are securely bonded together. The anchor shown in Fig. 46 is used because the beam, should it become

Digitized by Google

burned through at its center and fall down, can easily fall out of the wall without disturbing the brickwork and thereby endanger the stability of the wall. The advantage of this is illustrated in Fig. 47, where (*a*) shows a perspective view of a beam falling from a wall to which it has been securely anchored by an ordinary type of anchor, such as is bolted to the beam, while at (*b*) the beam is seated on a cast-iron anchor similar to that described in connection with Fig. 46, from which it can fall without damaging the wall in any way, and it leaves the anchor intact to receive a new beam when repairs are made. In order that this arrangement shall work perfectly, sufficient clearance must be left for the end of the timber to cant out of the wall without striking the brickwork.

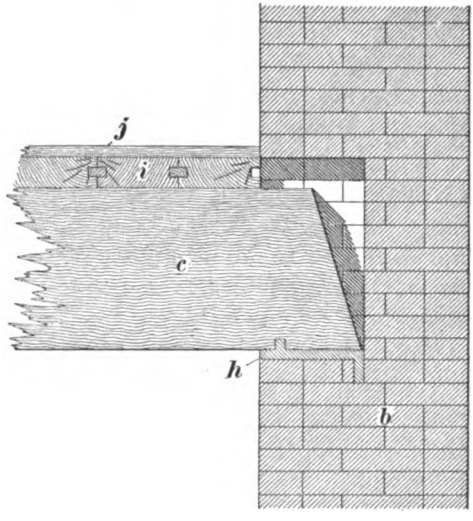

FIG. 46

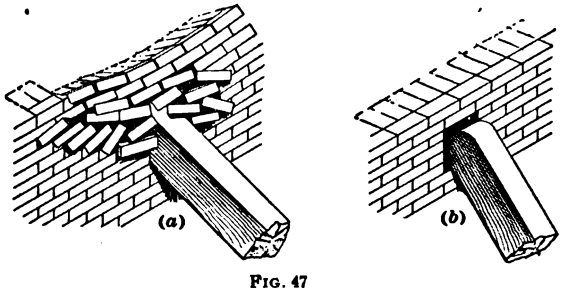

FIG. 47

68. On top of the floor timbers a double floor is laid, as shown in Fig. 43, the first floor consisting usually of 3-inch splined spruce planks *i*, although a thickness of 4 inches is

Digitized by Google

sometimes used and in some cases pine is the material. These planks are usually 6, 8, or 10 inches in width. The second course usually consists of a $1\frac{1}{4}$-inch hardwood floor *j*, preferably of maple, the individual boards being $3\frac{1}{2}$ inches in width and tongued and grooved so as to be matched together.

Splined planks have a groove cut in each edge into which a spline is driven. Thus they serve the same purpose as though tongued and grooved, and are cheaper because there is not so much timber wasted in cutting them. They should be planed on one side and should be long enough to span two bays; that is, 16, 20, or 24 feet, as the case may be. By this means the joints can be broken on the timbers and the strength greatly increased when laying them. About 6-inch spikes should be used in fastening them to the timbers; one keg of 100 pounds will lay about 1,400 square feet of floor.

Between the plank and hardwood floors one or two thicknesses of building paper, or in some cases asbestos felt, is usually laid. The strips of paper should be lapped one-half their width, and make a tight floor through which dirt and dust cannot sift and fall into the bearings of the machinery below and one which is also practically waterproof. A watertight floor is a great advantage in cases where a fire occurs and is confined to one room.

In some cases a layer of mortar $\frac{3}{4}$ inch thick is spread over the planking and the top floor laid on this. The idea is to make a fireproof construction, but as the mortar crumbles and sifts through the floor, and as its presence is undesirable when repairing the floor or in cutting belt holes, this practice is not to be recommended.

The top floor should be laid across the plank floor, in order to give the mill stiffness and solidity. Its boards are generally laid at an angle of 90° with the bottom planks, but are sometimes laid at an angle of 45°, although this is not advisable, as it is much more difficult to repair worn portions of the floor.

69. The maximum weights per square foot of floor area that textile mill structures are liable to be called on to support are given in Table IV.

Digitized by Google

In actual practice, the floor pressure of textile mills is rarely more than an average of 25 pounds per square foot over the entire mill; the weight of the floor itself, however, is about 20 pounds per square foot. Storage, shipping, and finishing rooms are generally loaded much more heavily than the other rooms of a mill.

70. Columns.—Engineers have arrived at no definite conclusion in regard to the relative merits of iron and wooden columns. The iron columns, of course, take up less space and hence have a much neater appearance and also

TABLE IV

Type of Structure	Weight per Square Foot Pounds
Cotton mill	50
Woolen mill	50
Worsted mill	60
Storehouse for cotton	150
Storehouse for loose wools	100
Storehouse for baled wools	150
Storehouse for woolen cloth (2 cases high)	150
Storehouse for worsted cloth (2 cases high)	200
Storehouse for machinery	200

make the rooms lighter. To offset this they are untrustworthy in case of a fire, as when they become heated if struck by a stream of cold water they immediately crack and collapse, thus letting down the floors above and rendering the damage much more extensive, since if they had remained intact, the fire might possibly have been confined to one room. Wooden columns, when exposed to fire, char on the outside for a depth of 2 or 3 inches; this charred portion seems to protect the rest of the column from burning. In damp places, however, wooden columns are not to be recommended; either iron columns or brick piers should be used.

Digitized by Google

Wooden columns, although necessarily much larger, are much more to be depended on, as they usually give evidence, by cracking or by the fibers breaking down before giving away. Iron columns are liable to contain flaws, and their section tends to be irregular; thus they are liable to give away without warning.

The best material for wooden columns is Southern pine, which can be obtained straight-grained and free from knots and seams. Oak is not as reliable as Southern pine, as it is apt to be knotty and the grain uneven, causing the column to warp in seasoning. Wooden columns should not be painted until thoroughly seasoned; otherwise, they are much more liable to rot.

Columns are bored in order to remove the heart of the tree, which has no particular strength and is subject to dry rot. An 8-inch column should have about a $1\frac{1}{2}$-inch hole bored through it, this being done from one end only; sometimes with larger columns a 2-inch hole is bored. The reason for not boring a hole in each end is that it is almost impossible to make the two holes meet exactly, and thus the section of the column at some point is liable to be reduced in area. A $\frac{1}{2}$-inch air hole should be bored at the top and is also recommended at the bottom of the column, in order to give free circulation of air, which is necessary to prevent dry rot. Care should be taken to have not only columns but all timbers in a good air circulation, as timbers in confined spaces are subject to dry rot, which will sometimes totally destroy the timber in a short time.

Although cast-iron columns are not recommended in fireproof constructions or in textile structures, they are found in many mills and in some cases are indispensable. The great difficulty with cast-iron columns is not so much in flaws in the metal as unevenness of section, caused by the cores floating when the column is cast. This is liable to make the column very thin on one side, and consequently extremely unreliable. All cast-iron columns should be tested with a pair of long calipers before being used, in order that it may be determined whether the section is uniform or not.

Digitized by Google

Care should also be taken that the ends of a column are square with its axis. In the mill under consideration round wooden columns are used, the round column having more resistance to fire than the square column. If square columns are to be used in mill construction, the corners should be chamfered so that they will not become defaced from contact with trucks, etc. For the same thickness, a square column is stronger than a round one, but round ones are generally used in textile mill buildings.

71. Roof Work.—For textile mills the so-called *flat roof*, shown in Fig. 43, having a pitch of only $\frac{1}{2}$ inch to the foot for drainage, is most appropriate. It is supported by timbers exactly the same as the floor timbers of the mill except for this pitch; that is, they rest on a cast-iron cap placed on wooden columns, the cap being secured to the timbers either by projecting flanges that enter slots in the timbers or by being bolted to them. The roof timbers should be covered with about 3-inch white-pine planks, rough on the upper side and planed on the lower. The planks should be 6 or 8 inches in width and grooved to be fitted with splines. They may be heavily beaded on each edge and in the center of each plank on the under side, in order to give the appearance of sheathing, if so desired. They should be the length of two bays and laid so as to break joints, as were the floor planks.

The so-called *gravel roof* five- or six-ply in thickness is recommended for mill structures. It is made as follows: Three thicknesses of tarred paper are laid so that each layer overlaps the one underneath it one-third of its width; this should be tacked down with $1\frac{1}{2}$-inch nails and $1\frac{1}{4}$-inch tin washers about every 2 feet. It is covered with a thin layer of hot coal-tar and then with two or three thicknesses of the tarred paper, depending on whether it is five- or six-ply roofing. Over this another layer of hot tar is placed and clean gravel spread over the whole roof. This makes a very durable roof and one that is largely used for protection from rain and snow.

Digitized by Google

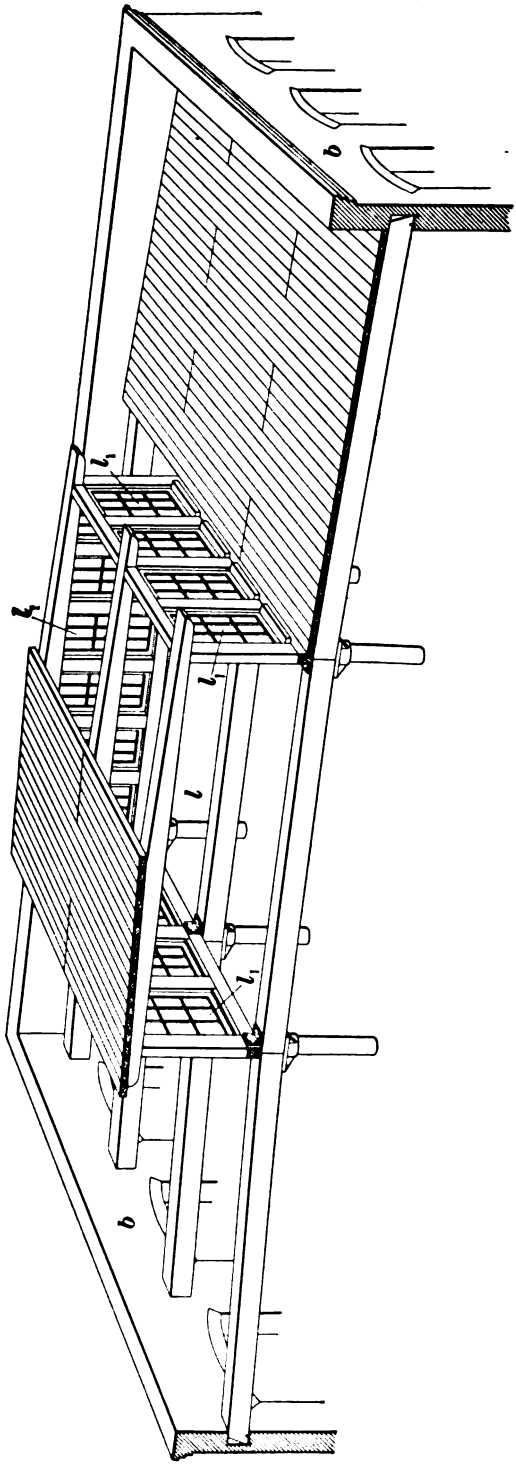

FIG. 48

Digitized by Google

Another roof that is very durable and that is often used is the *tin roof*. For it the planks are first covered with three thicknesses of tarred paper the same as for gravel roofs; over this a layer of tin with waterproof joints is laid, and afterwards painted.

72. When the mill is more than 50 feet in width it is advisable that a **monitor** be built in the center of the roof for light and ventilation. As shown in Fig. 48, this is a framed structure l raised in the center of the roof and provided on the sides and ends with windows l_1. As the roof planks do not extend under it, a large amount of light is thrown into the center of the upper story, making a very light room for particular processes. The windows are usually swiveled on iron rods, so that they may be opened to allow the heated air to pass out, and ventilate the room. The roof may be constructed exactly the same as the roof of the mill proper and should have the same pitch. Monitors are sometimes built in small detached portions and sometimes as a continuous structure running nearly the whole length of the mill in the center of the roof. Fig. 48 shows a parapet wall extending above the roof, but this is not necessary with a monitor roof nor even customary.

73. Doors.—The outside doors of the mill may be made of any ordinary pattern, but should be especially heavy and strong. All doors should open outwards in order to prevent any possibility of a crush in case of fire or accident. All doors or openings through fire-walls should have automatic fire-doors to prevent the passage of the fire from one room to another. These doors are best constructed of wood and covered with sheet tin with the joints clinched. Iron and steel doors are unreliable, since they warp badly with even a small fire and allow free passage of the fire through the fire-walls.

Fig. 49 shows the ordinary construction of an automatic, or self-closing, fire-door. The door b is constructed of two or three thicknesses of pine boards nailed either at right angles or diagonally across each other. Sometimes asbestos

Digitized by Google

felt is inserted between or over the boards, although this is not customary. The whole door is covered with sheet tin, the separate sheets being clinched and nailed to the door so that when the rib or clinch formed at the juncture of the sheets is turned over it will cover the nail heads. The door is hung on wheels *f* that run on an inclined track *e*, the slant of which should be at least $1\frac{1}{2}$ inches to the foot; it thus has

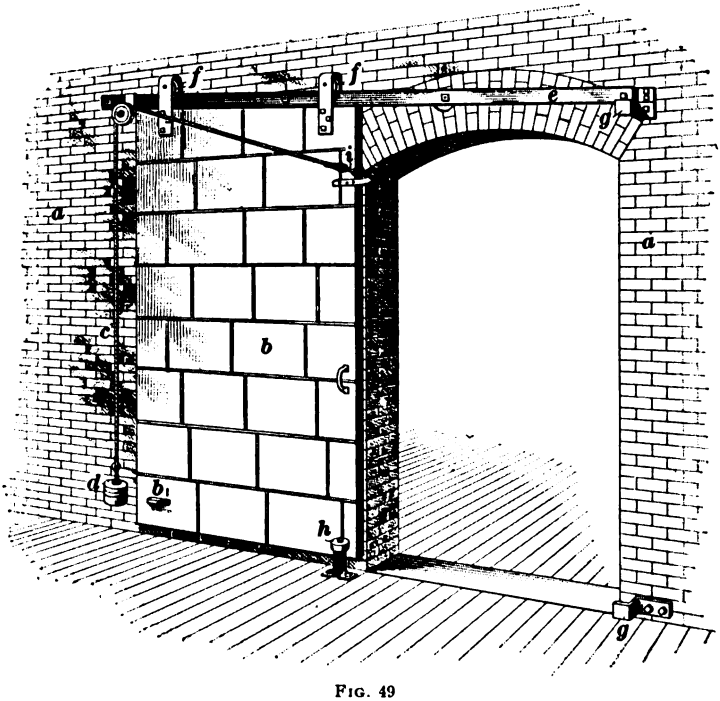

FIG. 49

a tendency to close the doorway, but under ordinary conditions this tendency is counterbalanced by a weight *d* that is attached to the door by a rope *c* and a fusible link *i*. The fusible link is made of an especially prepared metal that melts and allows the door to close when it is subjected to a temperature of 160° F. The two iron pieces *g* engage the edge of the door when it is closed, and a roller *h* engages with a wedge b_1 and holds the door firmly over the opening.

Digitized by Google

This door may be opened and closed ordinarily without disturbing the fusible link in the least. Fire-doors should be closed each night, but in case of neglect the automatic feature is an almost sure protection against the spreading of fire.

74. Windows. The windows in a textile mill should be of the greatest possible area consistent with preserving the strength of the walls. Fig. 50 shows one of the ordinary type; it is composed of two sashes *a*, *b* and the transom *c*. The sashes are balanced by weights attached to cords running over pulleys in the window frame, and may be raised or lowered, but the transom *c* is pivoted so as to be swung open to ventilate the mill.

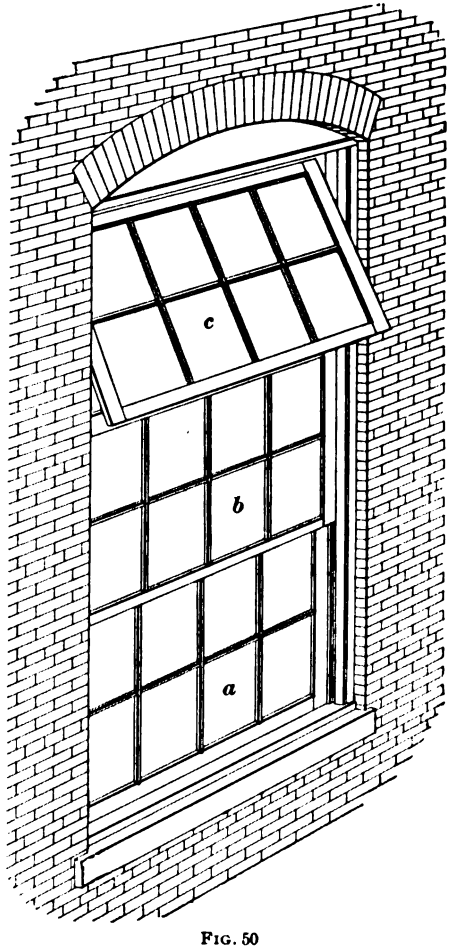

FIG. 50

Sometimes the openings for the windows in the walls of textile mills are made extremely wide and separated by a mullion, since with very wide windows the weight of the sashes is so great as to make them hard to raise. The sashes and window frames for a mill structure should be made nearly double the weight that is required for ordinary dwelling

Digitized by Google

houses, and should always be set with rectangular glass, as glass curved at the top to the arc of the arches, or *segment glass* as it is known, increases the cost of resetting to some extent and is of no particular advantage. Generally a good quality of American glass is suitable, but the use of corrugated or prism glass is being advocated at the present time, and many new mills are equipped with it. While this type of glass is not transparent, but rather might be termed translucent, it makes the rooms much lighter, since the light is diffused throughout the room without casting dark shadows. The sashes and frames of the windows should be kept well painted and the glass periodically washed.

75. Stairways. — Stairways should be separated from the mill proper by fireproof walls or should be located in a separate tower in order to prevent a fire from spreading from floor to floor. For the same reason not only stairways, but all openings from one floor to another should be avoided unless separated from the main mill by fireproof walls. Especially is this true in regard to belt ways and dust flues. Belts that are allowed to run through the floors for many stories sometimes carry the fire with them, and hardly anything will transmit a fire from one part of a room to another or from one floor to another as quickly as a moving belt, owing to the current of air set in motion by it. The belt tower is usually located in the center or at one end of the mill, and is usually arranged so that one line of shaft on each floor can be driven from the engine or from a head-shaft, as by this means the greatest economy of the transmission of power is obtained.

The best method of making stairways is to divide the flight by making a landing half way up. This construction makes short, straight flights and there is much less danger of crowding in the case of fire, while at the same time they will be found convenient on all occasions. In cases where spiral staircases must be used, although they are not to be recommended, care should be taken to have the central pier large enough to insure a proper width of tread on the inside of the stairs.

Digitized by Google

MILL ENGINEERING

(PART 2)

INTRODUCTION

1. The mill structure, or building, represents but a small part of the equipment of the mill, nor do the machines actually necessary for transforming the raw stock into yarn or cloth constitute the entire equipment, for in addition to these there are many appliances that comprise what might be termed the *auxiliary equipment* of the mill. Among these may be mentioned the power plant, the heating and ventilating plants, the plumbing and water-supply systems, and the fire-protection apparatus. Though the installation of these lies within the province of the engineer, and the work in its details does not concern the millman, he should have a general idea of the most desirable apparatus and of the methods that are considered the best mill practice, not only with the object of acquiring a general knowledge of their installation, but to be able to know how afterwards to maintain them at their highest efficiency and secure economical operation.

The importance of installing proper equipments for the generation of power, for heating and ventilating, for fire-protection, etc. cannot be overestimated. The equipment should be such as to furnish an ample supply of power for driving all the machines, shafting, etc. of the mill as economically as possible and such apparatus should be selected as is not liable to serious breakdowns. Heating and ventilating equipments should be such as to make working conditions comfortable in summer or winter. The water supply should be ample, and the plumbing sanitary.

For notice of copyright, see page immediately following the title page

Digitized by Google

POWER PLANT

STEAM POWER

BOILERS

2. The generation of power in suitable quantities for operating the machinery of the mill is a problem of primary importance, and in general may be said to be accomplished in mill work by one of two methods. The first, and the one commonly employed, is *steam power* and necessitates the combustion of coal, wood, or other fuel under boilers. The steam thus generated operates some form of steam engine that furnishes the motive power for the mill. The second method is the utilization of the energy of a stream of water that, in passing from a high to a low elevation, will, under suitable conditions, drive a waterwheel or turbine, furnishing motive power to the shafting and machinery. The power thus generated is termed *water-power*.

What may possibly be a third method is found in the *gas engine*, but as yet this type of engine has not been sufficiently developed for use in mill work.

Electricity, while used as a motive power to some extent, involves the use of water-power or steam power for its generation, and cannot therefore be considered as a primary source of power.

Steam power is by far the most reliable means of operating a mill and for this reason may be said to be not much more expensive than water-power, except in unusual cases where the water-power is unlimited, the outlay for installation and repairs reduced to a minimum, and the water supply reliable the year round. The equipment of a steam-power plant includes primarily the *boilers* for generating the steam, and the *engines* for converting the potential energy of the steam into actual motive power.

Digitized by Google

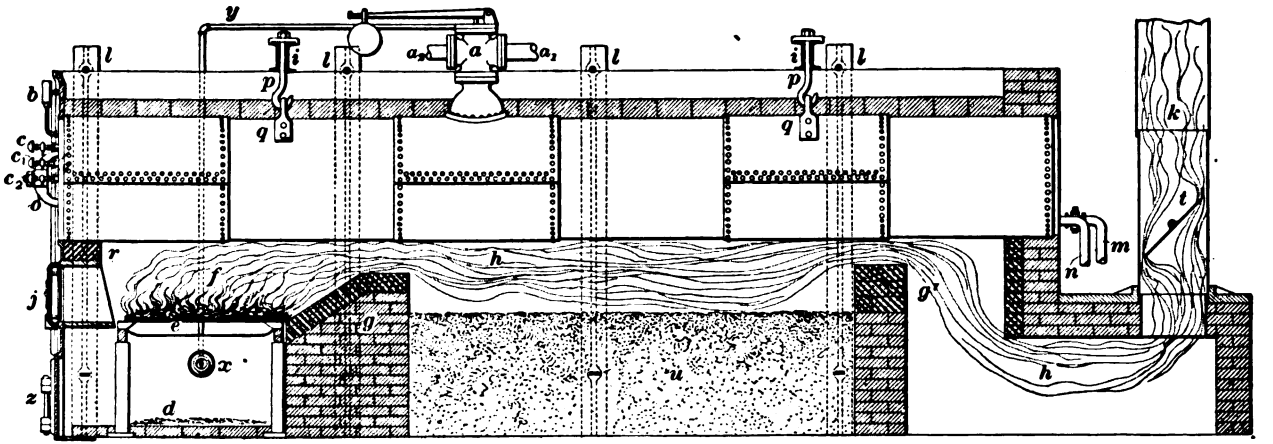

FIG. 1

Digitized by Google

In general there are three types of steam boilers—stationary, locomotive, and marine, the first being the type adopted in mill practice. Of *stationary boilers*, there are several kinds, varying in construction and principle.

3. The plain cylindrical boiler, shown in Figs. 1, 2, and 3, consists essentially of a long cylinder, called the *shell*, that is made of iron or steel plates riveted together as shown in Fig. 1; the ends are closed by flat or hemispherical plates called the *heads* of the boiler. One of the heads is shown in Fig. 2, carrying the fittings *b*, *c*, c_1, c_2. In this type of boiler the heads are made of wrought-iron or steel plate; the hemispherical, or dished, form of head, is generally used, since it is stronger than the flat head.

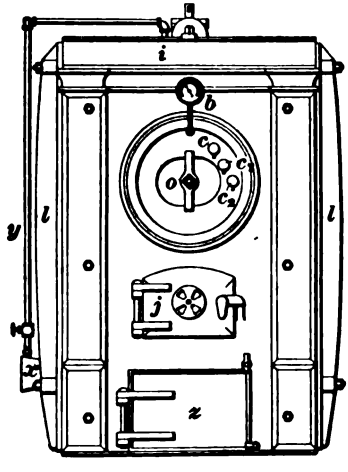

FIG. 2

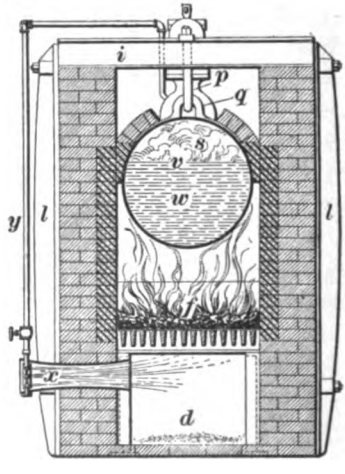

FIG. 3

The manner of suspending the boiler is shown in Figs. 1 and 3. The boiler is enclosed by brick side walls across which are laid channel beams *i*, *i* from which the boiler is suspended by means of the hooks *p*, *p* and eyes *q*, *q*, the latter being riveted to the shell. The side walls are supported and prevented from buckling by the *binders*, or *buck-staves*, *l*, *l*, which are cast-iron bars of T section that are bolted at the top and the bottom. The eyes *q*, *q* are placed

Digitized by Google

about one-fourth of the length of the shell from each end. This method of suspending the shell allows it to expand and contract freely when heated or cooled.

The wall built around the rear of the shell, as shown in Fig. 1, forms the chamber *h* into which opens the chimney or stack *k*. The *boiler front*, which is of cast iron, is shown in Fig. 2; Fig. 1 shows a section of it. The front end of the shell is partly surrounded by the firebrick *r*. The weight of the shell comes on the hooks *p*, *p*, the rear wall and firebrick *r* simply keeping it in position.

The *furnace f* is placed under the front end of the boiler shell. The fuel is thrown in through the door *j* and burns on the grate *e*, through which the ashes fall into the ash-pit *d*. To insure sufficient air for the complete combustion of the fuel, the furnace is sometimes supplied with a *blower x*; this consists of a cylinder leading into the ash-pit *d*, into which is led a jet of steam through the pipe *y*. The steam rushes into the ash-pit with great velocity, carrying a quantity of air with it. The pressure of the air in the ash-pit is thus increased, more air is forced through the fire, and the combustion of the fuel is more rapid and complete.

Behind the furnace is built a brick wall *g*, called the *bridge*, that serves to keep the hot gases in close contact with the under side of the boiler shell; as boilers of this type are generally quite long, a second bridge is usually added. The gases arising from the combustion of the fuel flow over the bridges into the chamber *h*, and through the chimney *k*; their flow is regulated by the damper *t* placed within the chimney. The space *u* between the bridges is filled with ashes or some other good non-conductor of heat. The door *z* in the boiler front gives access to the ash-pit for the removal of the ashes. The tops of the bridges, the inner surface of the side and rear walls, and, in general, all portions of the brickwork exposed to the direct action of the hot gases are made of firebrick (shown in Figs. 1 and 3 by the dark section lining), since it is able to withstand a very high temperature.

The firebrick work covers the upper portion of the boiler shell in such a manner as to prevent the hot gases from

Digitized by Google

coming in contact with the shell above the water-line *v*. It is a general rule in boiler construction and setting that under no circumstances should the fire-line be carried above the water-line. The top of the shell is covered by brickwork or some other non-conducting material to prevent radiation of heat. Water is forced into the boiler through the feed-pipe *n* which leads from a pump or injector. When in operation the water stands at about the level *v*, the space *s* above being occupied by the steam.

The *safety valve* is shown at *a*; its office is to prevent the steam pressure from rising above the desired point. The pipe a_1 is the main steam pipe leading to the engine; the pipe a_2 provides for the escape of the waste steam when the safety valve blows off.

The *steam gauge b* indicates the pressure of the steam in the boiler; it is attached to a pipe that passes through the front head into the steam space.

The *gauge-cocks* c, c_1, c_2 placed in the front head of the shell are used to determine the water level; for instance, if the cock c_1 is opened and water escapes it is evident that the water-line is above it, while if steam escapes, the water-line is below it.

The *manhole o* is an opening in the front head through which a man may enter and inspect or clean the boiler; it is closed by a plate and yoke.

The blow-off pipe *m* permits the boiler to be emptied of its water or sediment.

Plain cylindrical boilers are usually from 30 to 42 inches in diameter, and from 20 to 40 feet long, though they have been constructed with a diameter of 48, or more, inches, and a length of 60, and even 100, feet. They are only used in districts where fuel is very cheap, as on account of their small heating surface, they are very uneconomical. Their advantages are: cheapness of construction, strength, durability, and ease of access for cleaning and repairs.

4. The **flue boiler** differs from the plain cylindrical in having one or more large flues running lengthwise through

Digitized by Google

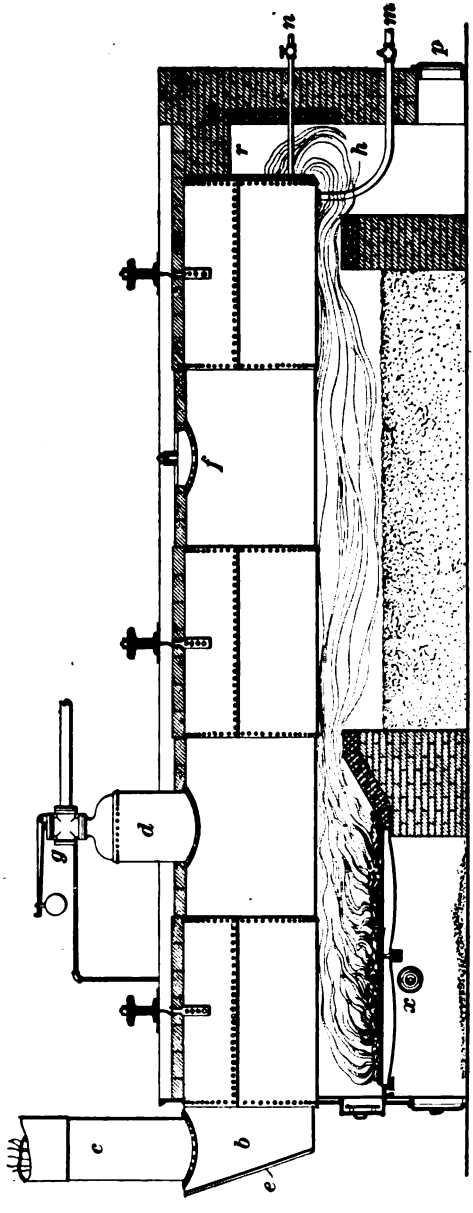

FIG. 4

Digitized by Google

the shell below the water-line; such a boiler is shown in elevation and section in Figs. 4, 5, and 6. The ends of the flues *a*, *a* are fixed in the front and rear heads of the shell. The front end of the shell is prolonged beyond the head, forming the *smokebox b* into which opens the smoke-stack *c*; the front of the smokebox is provided with a door *e*. The boiler shell is provided with the *dome d*, which forms a chamber where steam collects and frees itself from its entrained water before passing to the engine. The manner of supporting the shell and the construction of the furnace

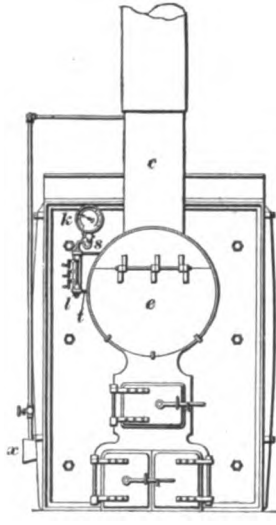

FIG. 5

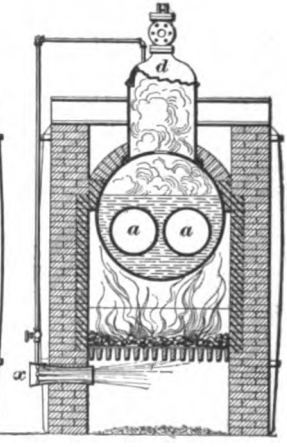

FIG. 6

and bridges are the same as were described for the plain cylindrical type. The hot gases, however, pass over the bridges to the chamber *h* and then through the flues *a*, *a* into the smokebox *b*, and out of the stack *c*. It is plain, therefore, that the heating surface is greater than that of the plain cylindrical boiler by the cylindrical surface of the flues *a*, *a*.

As shown in Fig. 5, the boiler has a cast-iron front, to which the furnace and the ash-pit doors are attached. A safety valve *g*, Fig. 4, is attached to the top of the dome;

Digitized by Google

from it are led two steam pipes—one to the engine, the other to carry the escaping steam outside the building.

The steam gauge *k* and gauge-cocks are placed on a column *l*, Fig. 5, that communicates with the interior of the shell through the pipes *s* and *t*, the former entering the steam space and the latter the water. The manhole *f*, Fig. 4, is placed on top of the shell instead of in the head. The feed-pipe is shown at *n*, the blow-off pipe at *m*; both pass through the rear wall. Access is given to the rear end of the shell and to the pipes *m* and *n* through the door *p*. This form of boiler may be provided with a blower, as shown at *x*.

The brick wall is built and supported in about the same manner as the wall of Fig. 1. The cast-iron *flue plate r*, Fig. 4, rests on the side and rear walls and supports the brickwork above it.

5. The **return tubular boiler** is a development of the flue boiler, the two large flues of the latter being replaced by

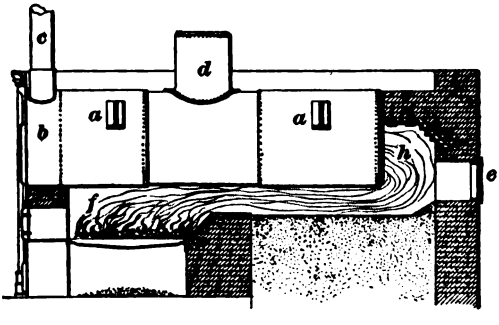

FIG. 7

a large number of small tubes, thus increasing the heating surface of the boiler. A side view of it is shown in Fig. 7; a cross-section through the boiler is shown in Fig. 8. The tubes extend the whole length of the shell, the ends being expanded into holes in the heads of the boiler. The front end of the shell projects beyond the head, forming the smokebox *b*, into which opens the stack *c*.

The shell is supported by the side walls through the brackets *a*, *a*, which are riveted to the shell and usually rest

Digitized by Google

on iron rollers. The boiler is generally provided with a dome *d*, though this is sometimes left off. The walls are built and supported by buckstaves in practically the same manner as those previously described. Since this type of boiler is generally short, one bridge only is used. Fire-brick is used for all parts of the wall exposed to the fire or heated gases. The fittings are not shown in the figures. The safety valve is placed on top of the dome, and the pressure gauge and gauge-cocks placed on the front of the boiler. The manhole is either in one of the heads or on top of the shell. The feedpipe enters the front head, the rear head, or the bottom of the rear end of the shell, while the blow-off pipe is placed at the bottom of the shell at the rear end. Access is given to the rear end of the boiler through the door *e*.

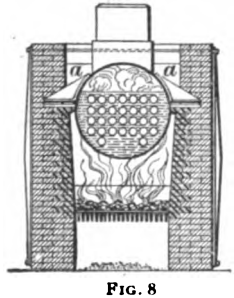

FIG. 8

As usual, the furnace *f* is placed under the front end of the boiler. The gases pass over the bridge, under the boiler into the chamber *h*, then through the tubes to the smoke-box *b*, and out of the stack *c*. The return tubular boiler is probably used more in mill work than any other.

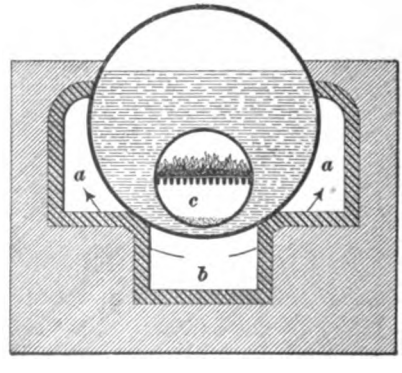

FIG. 9

6. Cornish and Lancashire Boilers. In the three forms of boilers so far considered, the furnace is placed outside of the shell of the boiler; such boilers are said to be **externally fired.** On the invention of the single-flue boiler, the idea was conceived of placing the fire in the flue, and the result

Digitized by Google

is the so-called **Cornish boiler,** a cross-section of which is shown in Fig. 9. The boiler is set in masonry in such a manner as to form the passages a, a, b. The grate is supported in the single large flue c. The heated gases pass from the furnace to the rear through the flue c, and then return beneath the boiler through the flue b; they again return to the rear through the side flues a, a, and thence out of the chimney. This path of the gases constitutes the *split draft.*

It was formerly the general practice to arrange the brickwork setting so that the gases returned to the front through the side flues a, a and to the rear through the lower flue b. It was found, however, that this practice retarded the circulation of the water and rendered the shell more liable to strains due to unequal expansion and contraction. Consequently, the first method of producing the split draft is used almost exclusively in modern practice.

As shown in the figure, the brickwork passages are lined with firebrick.

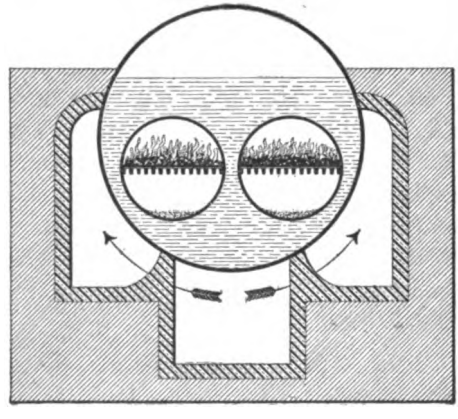

FIG. 10

7. The Lancashire boiler is a modification of the Cornish type. In order to give a large grate area and a large heating surface for the same diameter of shell, two large furnace flues are substituted for the one flue of the Cornish type. The brickwork setting, Fig. 10, is similar to that of the Cornish boiler, Fig. 9; the split draft is also formed in the same manner.

8. The Galloway boiler is a modification of the Lancashire type. It has two internal furnace flues fitted with grates, ash-pit, etc. in the usual manner. Instead of extending

Digitized by Google

through the whole length of shell, the two flues unite just behind the bridge into one large kidney-shaped flue, which extends from this junction to the rear head of the shell. This large flue is strengthened by a large number of water legs of the form shown in Fig. 11. The setting of the Galloway boiler is similar to that shown in Figs. 9 and 10. The draft is split as previously described.

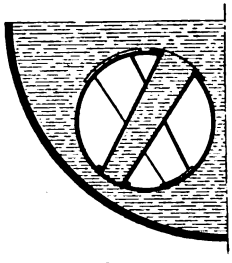

FIG. 11

9. The Cornish, Lancashire, and Galloway boilers belong to the general class known as **internally fired boilers.** The chief objection to these boilers is the liability of the collapse of the internal flues, and the straining actions set up by the expansion and contraction of these flues. The chief point in their favor, and in favor of internally fired boilers generally, is their economy in the use of fuel. Generally speaking, all conditions being the same, an internally fired boiler is 10 per cent. more economical than an externally fired boiler; this fact is due to the loss of heat by radiation through the brickwork setting of the latter class of boilers. These boilers are extremely popular in England, and on the continent of Europe, but they are little used in the United States.

10. Water-Tube Boilers.—The various types of boilers described have been developed from the original plain cylindrical boiler by the addition of flues and tubes, for the purpose of increasing the water-heating surface; they are, in general, known as **fire-tube boilers.** A similar development along a different line has given rise to a distinct class of boilers, known as **water-tube boilers.**

11. The **Babcock and Wilcox water-tube boiler,** shown in Fig. 12, consists essentially of a main horizontal drum, or shell, *b* and of a series of inclined tubes *t*, *t*. (Only a single vertical row of tubes is shown in the figure, but it will be understood that there are usually seven or eight of these rows to each horizontal drum.) The ends of the tubes

Digitized by Google

of a vertical row are expanded into hollow iron castings *h*, called ***headers***, that are placed in communication with the drum by tubes, or *risers*, *c*, *c*. A handhole is placed in the header in front of each tube for the purpose of cleaning, inspecting, or removing the tubes.

The usual method of supporting the boiler, which is not shown in the figure, is to hang it from wrought-iron girders resting on vertical iron columns; the brickwork setting is not depended on as a means of support. This make of boiler, in common with all others of the water-tube type, requires a brickwork setting to confine the furnace gases to their proper field.

The furnace is of the usual form and is placed under the front end of the nest of tubes. The bridge wall *g* is built

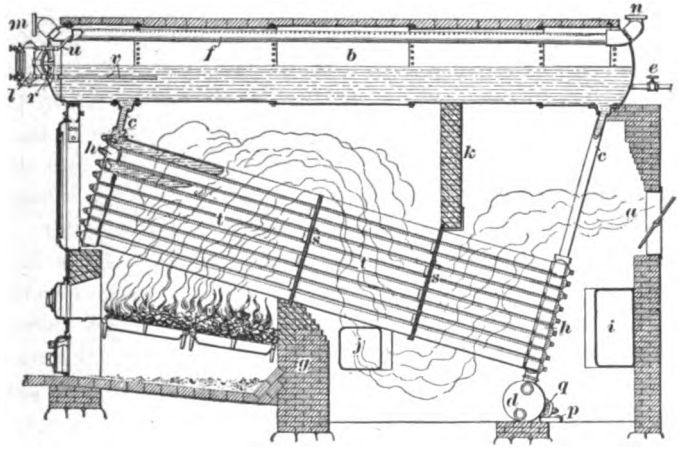

FIG. 12

up to the bottom row of tubes; another firebrick wall *k* is built between the top row of tubes and the drum. These walls and the baffle plates *s*, *s* force the hot furnace gases to follow a zigzag path back and forth between the tubes. The gases finally pass, through the opening *a* in the rear wall, into the chimney flue.

The feedwater is introduced through the feedpipe *e*. The steam is collected in the *dry pipe f*, which terminates in the

Digitized by Google

nozzles m, n, to one of which is attached the main steam pipe, and to the other the safety valve. The pressure gauge, cocks, etc. are attached to the column *l*, which communicates with the interior of the shell by the small pipes *u, v*— the former of which extends into the dry pipe, the latter into the water.

At the bottom of the rear row of headers is placed the *mud-drum d*. Since this drum is the lowest point of the water space, most of the sediment naturally collects there and may be blown out from time to time through the blow-off pipe *p*. The drum *d* is provided with a handhole *q*, while a manhole *r* is placed in the front head of the drum *b*. The heads of the drums are of hemispherical form, and, therefore, do not require bracing. Access may be had to the space within the walls through the doors *i, j*.

The circulation of water takes place as follows: The cold water is introduced into the rear of the boiler; the furnace being under the higher end of the tubes, the water in that end expands on being heated, and is also partly changed to steam; hence, a column of mingled water and steam rises through the front headers to the front end of the drum *b*, where the steam escapes from the surface of the water. In the meantime, the cold water fed into the rear of the drum descends to the rear headers through the long tubes *c* to take the place of the water that has risen in front. Thus, there is a continuous circulation in one direction, sweeping the steam to the surface as fast as it is formed, and supplying its place with cold water.

12. The **Heine water-tube boiler**, shown in Fig. 13, differs in many respects from those described. It consists of a large drum *a* placed above, and parallel with, the nest of tubes *t, t*, and inclined at an angle with the horizontal that brings the water level to about one-third its height in front and about two-thirds its height in the rear. The ends of the tubes are expanded into the large wrought-iron water legs *b, b* that are flanged and riveted to the shell, which is cut out for about one-fourth of its circumference to receive them, the

Digitized by Google

opening being from 60 to 90 per cent. of the total cross-sectional area of the tubes. The drum heads are of a hemispherical form and, therefore, do not need bracing. The water legs form the natural support of the boiler, the front water leg being placed on a pair of cast-iron columns *e* that form part of the boiler front, while the rear water leg rests on rollers *f* that move freely on a cast-iron plate bedded in the rear wall; these rollers allow the boiler to expand freely when heated.

The boiler is enclosed by a brickwork setting in the usual manner. The bridge *g*, made largely of firebrick, is hollow,

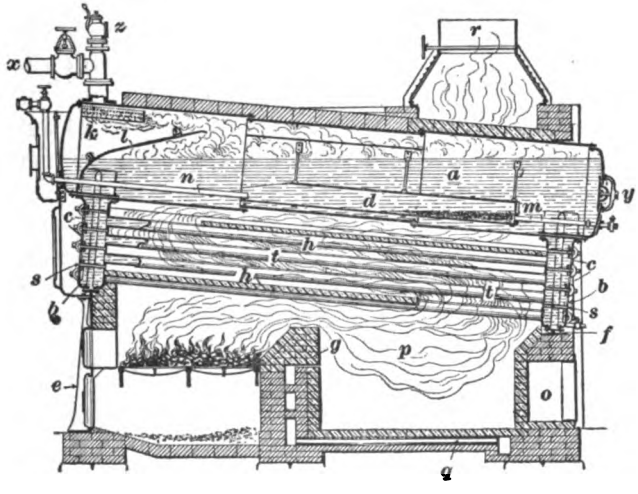

FIG. 13

and has openings in the rear to allow air to pass into the chamber *p* and mix with the furnace gases. This air is drawn from the outside through the channel *q* in the side wall and is heated in passing through the bridge. In the rear wall is the arched opening *o*, which is closed by a door and is further protected by a thin wall of firebrick; this may be removed when it is necessary to enter the chamber *p*, and afterwards replaced.

The feedwater is brought in through the feedpipe *n*, which passes through the front head. As the water enters, it flows

Digitized by Google

into the mud-drum *d*, which is suspended in the main drum below the water-line, and is thus completely submerged in the hottest water in the boiler. This high temperature precipitates the impurities contained in the feedwater; these settle in the mud-drum *d* and may be blown out through the blow-out pipe *m*.

Layers of firebrick *h*, *h* act as baffle plates and force the furnace gases to pass back and forth between the tubes; the gases finally escape through the chimney *r* placed above the rear end of the boiler. The drum in the vicinity of the chimney is protected by firebrick, as shown in the figure, to protect the steam space from the action of the hot gases.

The steam is collected and freed from water by the perforated dry pipe *k*. The main steam pipe, with its stop-valve, is shown at *x*, the safety valve at *z*. In order to prevent a combined spray of mixed water and steam from spurting up from the front header and entering the dry pipe, a deflecting plate *l* is placed in the front end of the drum. A manhole *y* is placed in the rear head of the drum. The flat sides of the water legs are stayed together by the stay-bolts *s*, *s*. A handhole *c* is placed in front of each tube to give access to its interior; the covers for these holes have been omitted in the illustration in order to avoid confusion.

Where a battery of several of these boilers is used, an additional steam drum is placed above and at right angles to the drums *a*.

13. The **Stirling boiler,** shown in Fig. 14, is a departure from the regular type of water-tube boilers. It consists of a lower drum *a* connected with three upper drums *b*, *b*, *b* by three sets of nearly vertical tubes; these upper drums are in communication through the curved tubes *c*, *c*, *c*. The curved forms of the different sets of tubes allow the different parts of the boiler to expand and contract freely without strain.

The boiler is enclosed, as shown, in a brickwork setting, which is provided with various holes *h*, *h*, so that the interior may be inspected or repaired. The boiler is suspended from a framework of wrought-iron girders not shown in the figure.

Digitized by Google

The bridge *e* is lined with firebrick, and is built in contact with the lower drum *a* and the front nest of tubes. An arch *d* built above the furnace, in connection with the bafflers *f*, *f*, causes the heated gases to pass up and down between the tubes. The arch and the bafflers are made of firebrick.

The cold feedwater enters the rear upper drum through the tube *x* and descends through the rear nest of tubes to

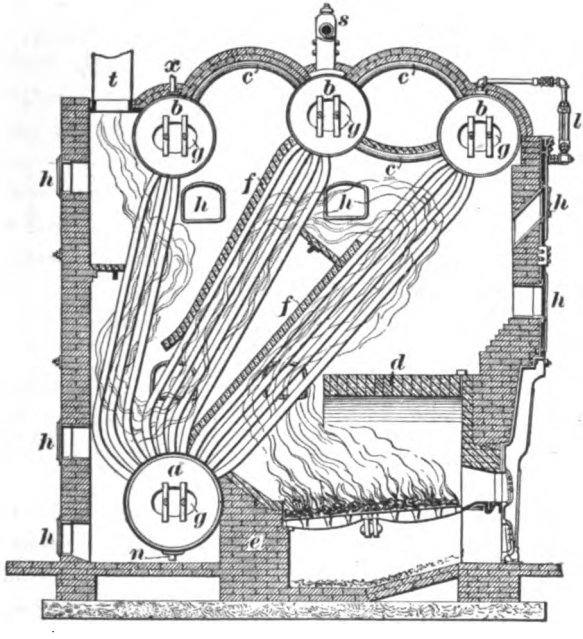

FIG. 14

the drum *a*, which acts as a mud-drum and collects the sediment brought in by the water, which is removed by means of the blow-off pipe *n*. The steam collects in the front upper drums *b*, *b*. The steam pipe and safety valve *s* are attached to the middle drum. The chimney *t* is located behind the rear upper drum; therefore, the cold feedwater enters the coolest part of the boiler, and the circulation of the water is directly opposite to that of the escaping hot gases. The

Digitized by Google

water column *l*, with its fittings, is placed in communication with the front upper drum. All the drums are provided with large manholes. The boiler is made with a cast-iron front.

The following advantages are claimed for the Stirling boiler: (1) The vertical position of the tubes prevents the collection of sediment and at the same time encourages the rapid rise and separation of the steam as soon as it is formed. (2) The boiler is very simple and easy to construct; there are no flat surfaces to be stayed, and there is little or no machine work required in its manufacture. (3) It is easy of access for cleaning or repairs; any part of the boiler may be inspected by removing the necessary manhole plates.

The water-tube boilers described are coming into extensive use. The most important points in their favor are their safety from disastrous explosion and their economy in the use of fuel. An objection sometimes urged against them is that they require more attention; since they usually have much less cubic capacity than cylindrical boilers of the same power, the water level must be closely watched.

14. The Feed-Apparatus.—Water is supplied to a boiler either by a steam pump, by an injector, or by both. Every boiler should have two independent feeds, in order to prevent accident should one get out of order.

The feedwater pipe may enter the boiler either through one of the heads or through the shell. By some engineers it is placed in the front head directly over the *furnace sheet* of cylindrical, flue, or return tubular boilers, while others place it on top in the shell; still others place it as low as possible in the back head, or through the front or back head, just below the water-line near the shell. It is not good practice, however, to deliver the cold feedwater near the hot furnace plates, as the strains set up by the sudden cooling of the plates may seriously injure them. Feedpipes should not terminate immediately at the plate into which they are screwed, but between the center of the boiler and the rear head; sometimes 2 or 3 feet of the end of the feedpipe is perforated for the purpose of diffusing the feedwater.

Digitized by Google

The position of the feedwater pipe, and likewise the point where the feedwater discharges into the boiler, have been shown in the illustrations of some of the boilers described.

15. In Fig. 15 is shown an ordinary method of arranging the feedwater pipes, where several boilers are supplied by the same pump. The pump discharges the feedwater into the main pipe p, p, which runs along the fronts of the boilers; the branch pipes that enter the front head c of each

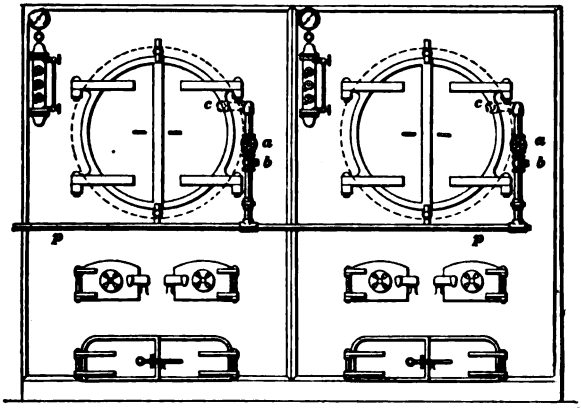

FIG. 15

boiler are provided with a globe valve a and a check-valve b. The globe valve shuts off the water from the boiler, while the check-valve allows the water to enter the boiler when the globe valve is open, but prevents its return.

16. Feedwater Heaters.—It is important that the feedwater should be introduced into the boiler at as high a temperature as possible; for by this means the strains produced in different parts by the introduction of cold feedwater may be avoided and a saving in fuel effected. Feedwater heaters are of two classes: (1) Those that use exhaust steam from the engine; (2) those that use the waste furnace gases. Heaters of the first class usually consist of a vessel, generally of cylindrical form, filled with rows or coils of tubes. In some heaters, the steam passes through tubes

Digitized by Google

that are surrounded by the feedwater; in others, the water is pumped through the tubes, which are, in this case, surrounded by the exhaust steam.

A common form of feedwater heater is shown in Fig. 16, which gives two views—a longitudinal section through the shell and a section taken along a line through the manhole *h* and the inlet feedpipe *f*. It consists of an outer cylindrical shell and an inner shell fitted with numerous tubes. The feedwater enters through *f* and fills the space in the inner shell not occupied by the tubes. The exhaust steam enters at *a*, flows through the tubes, then back through the space between the inner and outer shells, and out through *b*. The

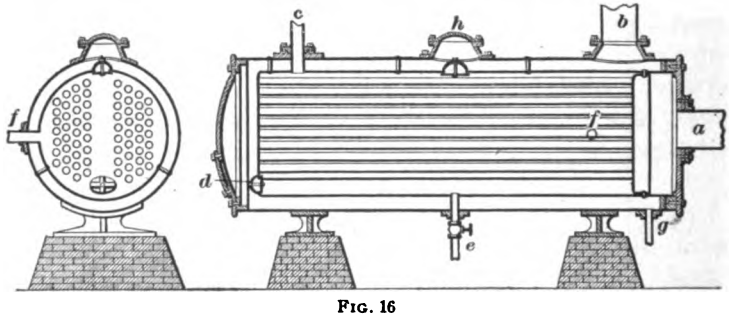

FIG. 16

feedwater flows through *c* into the boiler; *d* is a handhole; *e* the blow-off pipe; and *h* a manhole. When it is desired to economize space, vertical feedwater heaters are used instead of the horizontal pattern shown.

17. Economizers use the heat in the waste furnace gases to raise the temperature of the feedwater. The temperature of the gases on entering the chamber is usually from 450° to 650° F., and by lowering it to 250° or 300° a marked saving of fuel must result. The draft of the chimney, however, depends on the temperature of the gases, but the loss in draft consequent on the reduction of temperature may be made up by increasing the height of the chimney.

Fig. 17 shows the location of an economizer with respect to the boilers and chimney; it is placed directly in the flue. The water enters at *f*, where the economizer is coolest, and

Digitized by Google

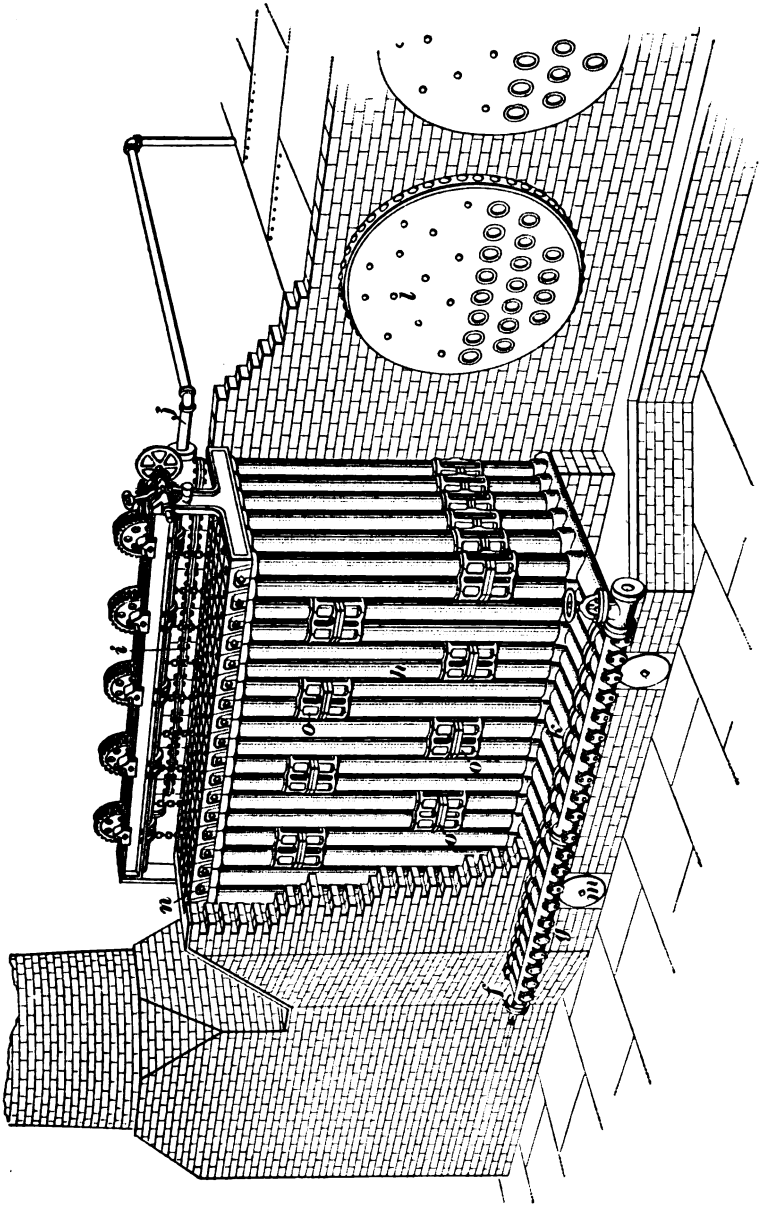

FIG. 17

Digitized by Google

flows along the pipe *g*, from which it flows, at right angles to its former direction, through a series of horizontal radiating headers *k* and up the rows of vertical tubes *h* that connect with them. Each of these vertical rows has an upper header *n* that has one outlet into the delivery pipe *i*, to which is connected the pipe *j* leading to the boilers *l*. The hot gases from the boilers pass through the rows of tubes on their way to the chimney, coming in contact with the rows containing the hottest water first. The feedwater may be heated by this means to as high as 300° F. and the temperature of the gases reduced from the neighborhood of 600° to 250°, or 300°. The fragment of the brick wall, shown at the left, is supposed to continue to the right in front of the

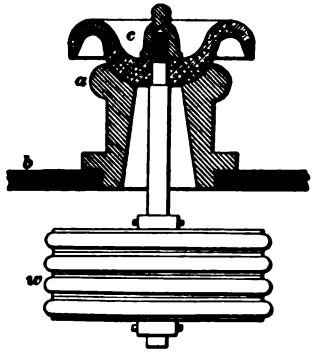

FIG. 18

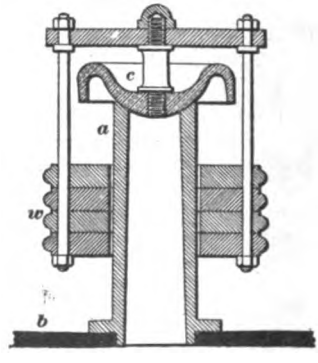

FIG. 19

economizer and also in front of the boilers over the low wall there indicated, thereby completing the flue leading from the boilers to the chimney.

The hot gases deposit soot and other unconsumed particles on the tubes. Since these are bad conductors of heat, the efficiency of the economizer would soon be greatly impaired unless means were provided for removing the soot. This is accomplished by scrapers *o*, *o* that are moved up and down by means of suitable mechanism on top of the economizer; the opening *m*, with other similar openings, is for the removal of the soot scraped from the tubes.

Digitized by Google

18. The **dead-weight safety valve,** shown in Fig. 18, consists of a hollow seat *a* attached to the boiler shell *b*, over which is fitted the valve disk *c*. The disk is loaded with a heavy weight *w* that hangs into the steam space of the

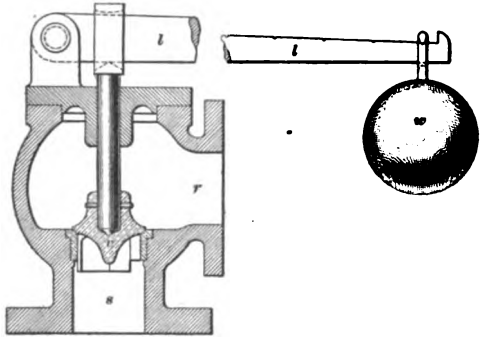

FIG. 20

boiler. Fig. 19 shows another form of dead-weight valve, in which the weight is carried outside of the boiler shell.

Two forms of **lever safety valves** are shown in Figs. 20 and 21. In Fig. 20, the valve *v* is held to its seat by the weighted lever *l*. The position of the weight *w* is adjustable,

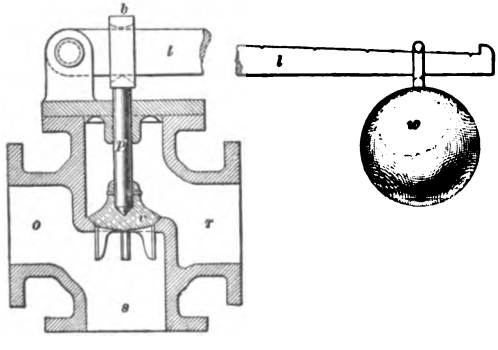

FIG. 21

so that the valve may be set to blow off at different steam pressures. The valve shown in Fig. 20 is attached directly to the boiler shell; the steam enters from the boiler at *s* and is discharged through the orifice *r*. That shown in Fig. 21

Digitized by Google

differs from the other in being attached to the supply pipe. The steam passes on its way from the boiler through the passage *s*. When the pressure rises above the normal, the valve *v* opens and the steam escapes into the air through the opening *r*.

19. The **steam gauge** indicates the pressure of the steam contained in the boiler; the most common form is the *Bourdon pressure gauge*, Fig. 22. It consists of a tube *a*, of elliptical cross-section, that is filled with water and connected at the point *b* with a pipe leading to the boiler. The

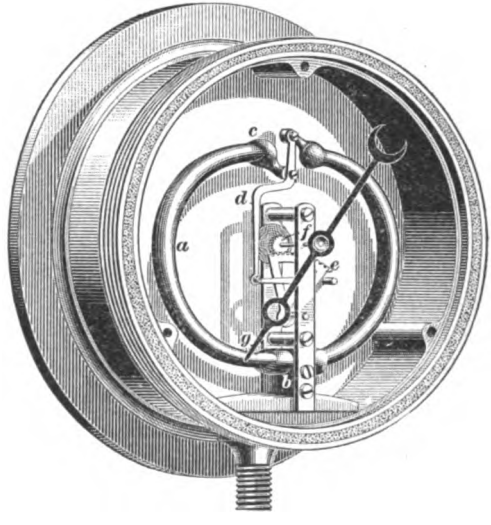

FIG. 22

two ends of the tube *a* are closed and attached to a link *d* that is, in turn, connected with a sector *e*; the latter gears with a pinion *f*, which is attached to the shaft carrying the index pointer *g*. When the water contained in the elliptical tube is subjected to pressure, the tube tends to take a circular form, and the tube as a whole straightens out, throwing out the free ends a distance proportional to the pressure. The movements of the free ends are transmitted to the pointer by the link, sector, and pinion, and the pressure is recorded on the graduated dial.

Digitized by Google

20. The **gauge glass** is a glass tube so placed that its lower end communicates with the water space of the boiler, while its upper end communicates with the steam space. Hence, the level of the water in the gauge should be the same as in the boiler.

Boilers should be provided with both cocks and gauge glasses; Fig. 23 shows an arrangement recommended by the Hartford Boiler Insurance Company. *a* is a round cast-iron column, the inside diameter of which is about 4 inches. The upper end communicates with the steam space of the boiler by means of the pipe connection *b*, and the lower end with the water space through the pipe connection *c*; *d* is a drip pipe for removing the condensed steam from the column. The water glass *e* communicates with the column through the connections *f*, *g*. There are three gauge-cocks, *h*, *i*, *j*. The center line of the lowest, *j*, should be located at least 3 inches above the level of the tops of the upper row of tubes in a tubular boiler to insure their always being covered with water. The gauge *l* is connected to the pipe *b* by means of the inverted siphon pipe *k*.

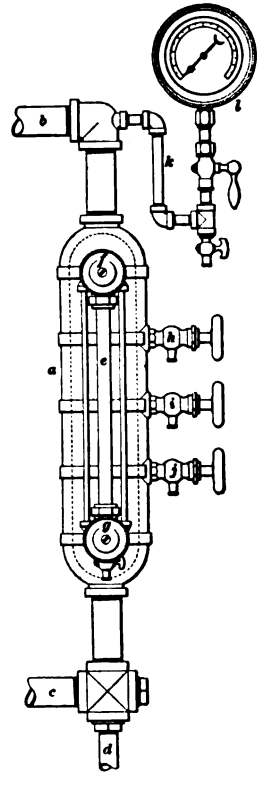

FIG. 23

21. **Fusible plugs** are placed in the upper plates, or *crown sheets*, of furnaces as a safeguard against overheating through shortness of water; they consist of an alloy of tin, lead, and bismuth, which melts at a comparatively low temperature. So long as the crown sheet is well covered with water, the plug is kept from melting by the comparative coolness of the water;

Digitized by Google

but should the water sink low enough to uncover the top of the plug, it quickly melts and allows the steam and water to rush into the furnace, thus relieving the pressure and extinguishing the fire.

22. The **grate**, which supports the fuel, is usually made of cast-iron bars *a*, Fig. 24, placed side by side and supported by wrought-iron bearers. The lugs cast on each bar determine the size of the air spaces in the grate. For anthracite coal, the air space is $\frac{3}{8}$ to $\frac{1}{2}$ inch wide; while for coals that cake much, the width of space may be $\frac{3}{4}$ inch. The bars are about $\frac{3}{4}$ inch wide at the top and taper toward the bottom. For long furnaces, the bars are generally made in lengths of about 3 feet each, with a bearer in the middle of the grate.

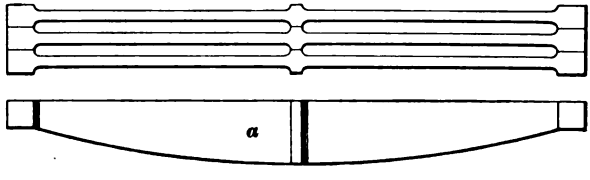

FIG. 24

Long grates are generally set with the slope toward the bridge to facilitate the firing. Shaking grates are to some extent taking the place of the ordinary grate. By their use the fire may be cleaned with little labor and without opening the fire-door.

STEAM ENGINES

23. A **steam engine** is a machine for converting the *potential*, or stored, energy of steam under pressure into *kinetic*, or actual, energy as a source of motive power for driving the machines of the mill or for performing such other work as may be desired. In a general way, engines may be divided into three classes—stationary, locomotive, and marine—the first class being the type generally used in mill work. Stationary engines are designated, according to the number and arrangement of the cylinders, as *simple*, *compound*, *triple expansion*, etc., or, according to the type of

Digitized by Google

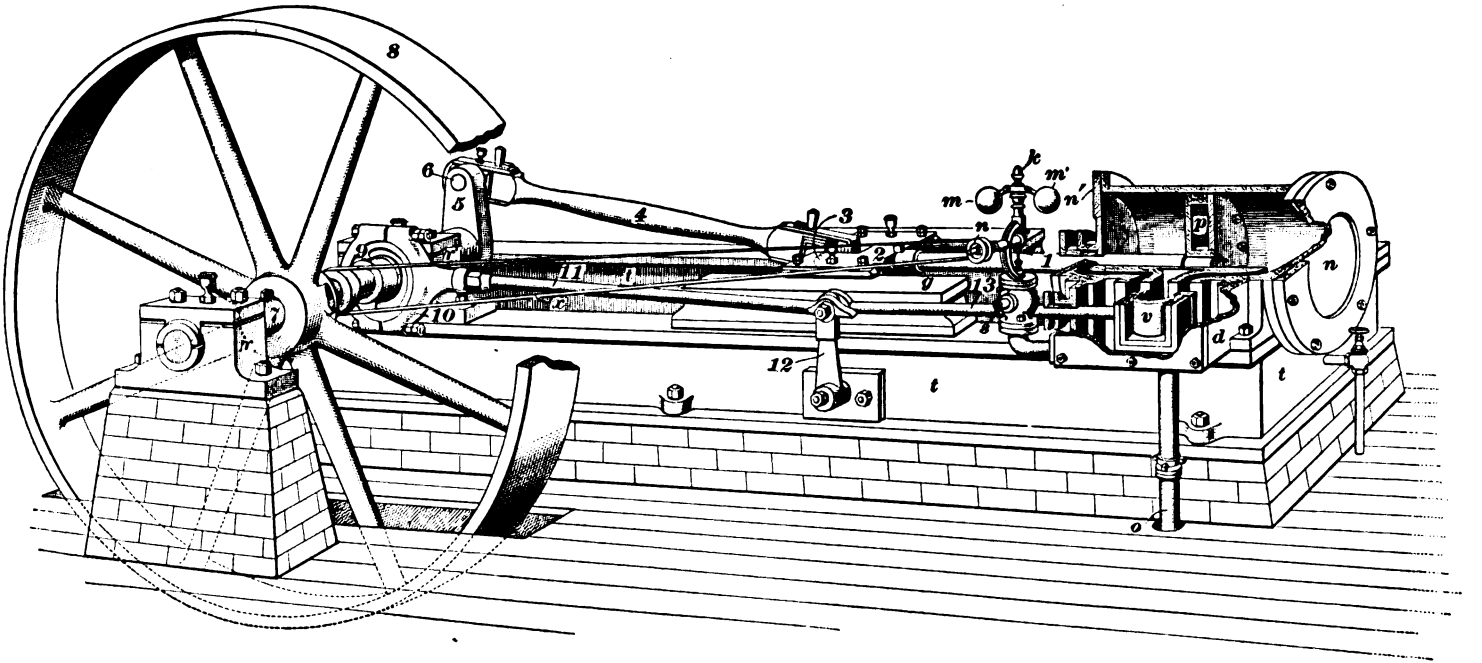

FIG. 25

Digitized by Google

valve used, as *plain slide-valve*, *automatic cut-off*, *Corliss*, etc.; they may be horizontal or vertical, condensing or non-condensing, single-acting or double-acting. All these types involve essentially the same principles and therefore only those that are commonly met with in mill work will be described.

24. Simple Slide-Valve Engine.—In Fig. 25 a simple, plain, slide-valve engine is shown, while in Fig. 26 is shown a section through the cylinder. *h* is the head end and *c* the

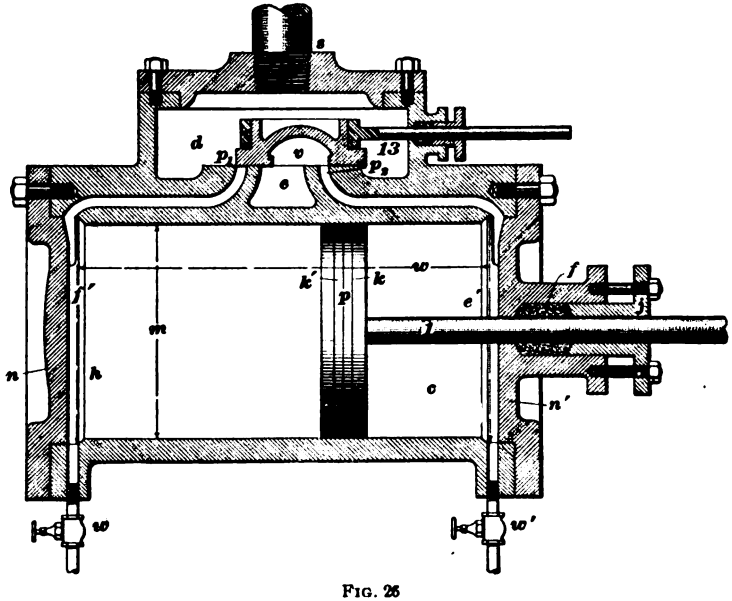

FIG. 26

crank end of the steam cylinder; p_1, p_2 are the steam ports; *d* is the steam chest; *e*, the exhaust port; *n*, *n'*, the cylinder heads; *s*, the steam supply pipe; *o*, Fig. 25, the exhaust pipe that connects with the exhaust port *e*; *g*, one of the two guide bars; *r*, *r'*, the shaft bearings; and *t*, the bed, or frame, of the engine. These parts do not change their relative positions when the engine is in motion. *p* is the piston; *1*, the piston rod; *2*, the crosshead; *3*, the crosshead pin; *4*, the connecting-rod; *5*, the crank; *6*, the crankpin; *7*, the crank-shaft; *8*, the

Digitized by Google

flywheel; *9*, the eccentric; *10*, the eccentric strap; *11*, the eccentric rod; *12*, the rocker; *13*, the valve rod, or stem; and *v*, the slide valve. These parts are movable and change their relative positions when the engine is in motion. The working length *w* of the cylinder is slightly less than the distance between the cylinder heads, since a small space must be left between the head and the piston when the latter is at the end of its stroke; this space, together with the volume of the steam port, which leads to it, is called the *clearance*. The diameter, or bore, is *m*.

The *stroke* of the engine is the travel of the piston *p*; it is equal to the diameter of the circle described by the crankpin *6*, or, what is the same thing, it is equal to twice the length of the crank *5*, this length being measured from the center of crankpin *6* to the center of the crank-shaft *7*. Since the piston and crosshead are rigidly fastened to the piston rod, the stroke must also be equal to the travel of the crosshead.

The size of an engine is generally expressed by giving the diameter of the cylinder and the stroke, in inches; thus, an engine having a cylinder diameter of 16 inches, and a stroke of 22 inches, is called a $16'' \times 22''$ engine.

At the ends *e'*, *f'*, the cylinder is *counterbored;* that is, for a short distance, the bore is greater than *m*. The piston projects partly into this counterbore at the end of each stroke. Were it not for the counterbore, the piston would not wear the cylinder walls their entire length, and shoulders would be formed at each end of the cylinder, with the result that when it became necessary to take up the wear of the joints in the connecting-rod, and thus slightly increase the length of the connecting-rod, the piston being shoved slightly toward the head end of the cylinder, would strike the shoulder and thus cause an undesirable pounding. Drain cocks *w*, *w'* are fitted in each end of the cylinder for the discharge of the condensed steam.

The piston fits loosely in the cylinder and has split rings *k*, *k'* inserted, which spring out so as to press against the wall of the cylinder and prevent leakage of steam between the wall of the cylinder and piston; they are usually held in

Digitized by Google

place by a follower plate, which is bolted to the head end of the piston *p*. The piston rod *1* is a round bar rigidly connected to both the piston *p* and the crosshead *2*.

The *stuffingbox f*, in which packing is placed, is fitted with a gland *j* that, when bolted down, compresses the packing around the piston rod *1* and makes a steam-tight joint. This packing usually consists of split rings that are so placed that the split of one ring is covered by the solid part of the next. The crosshead *2* is given an easy sliding fit between the guide bars *g*, which are in line with the path of the piston rod, and combine with the crosshead to relieve the piston rod of all bending stresses.

The connecting-rod *4* joins the crosshead and crank *5*; it is fastened to the crosshead by the crosshead pin *3*, and to the crank by the crankpin *6*. Connecting-rods are usually from four to six times the length of the crank, or from "4 to 6 cranks" in length.

25. In operation, the steam at the boiler pressure is admitted to the steam chest *d*, through the main steam pipe *s*. As the slide valve *v*, known as a **D**-*slide valve*, is moved to the right (Fig. 26) by the valve rod *13*, which is operated by the eccentric on the crank-shaft, the port p_1 is uncovered. This admits the steam to the head end *h* of the cylinder and forces the piston from the head end to the crank end of the cylinder. As the piston moves in this direction, the exhaust steam from the previous stroke of the piston is forced through the port p_2, and the exhaust port *e*, the under side of the valve *v* being hollowed out to allow the exhaust steam to pass from the cylinder. As the valve *v* is moved in the opposite direction by the eccentric *9* and valve rod, the port p_1 is closed. This usually takes place a little before the piston reaches the end of its stroke, so as to gain the benefit of the expansion of the steam as well as of its initial, or boiler, pressure, and is known as the *cut-off*. The continued movement of the valve then opens the port p_2 and allows the steam to enter the crank end *c* and force the piston from the crank end to the head end of the cylinder, the exhaust steam from the previous

Digitized by Google

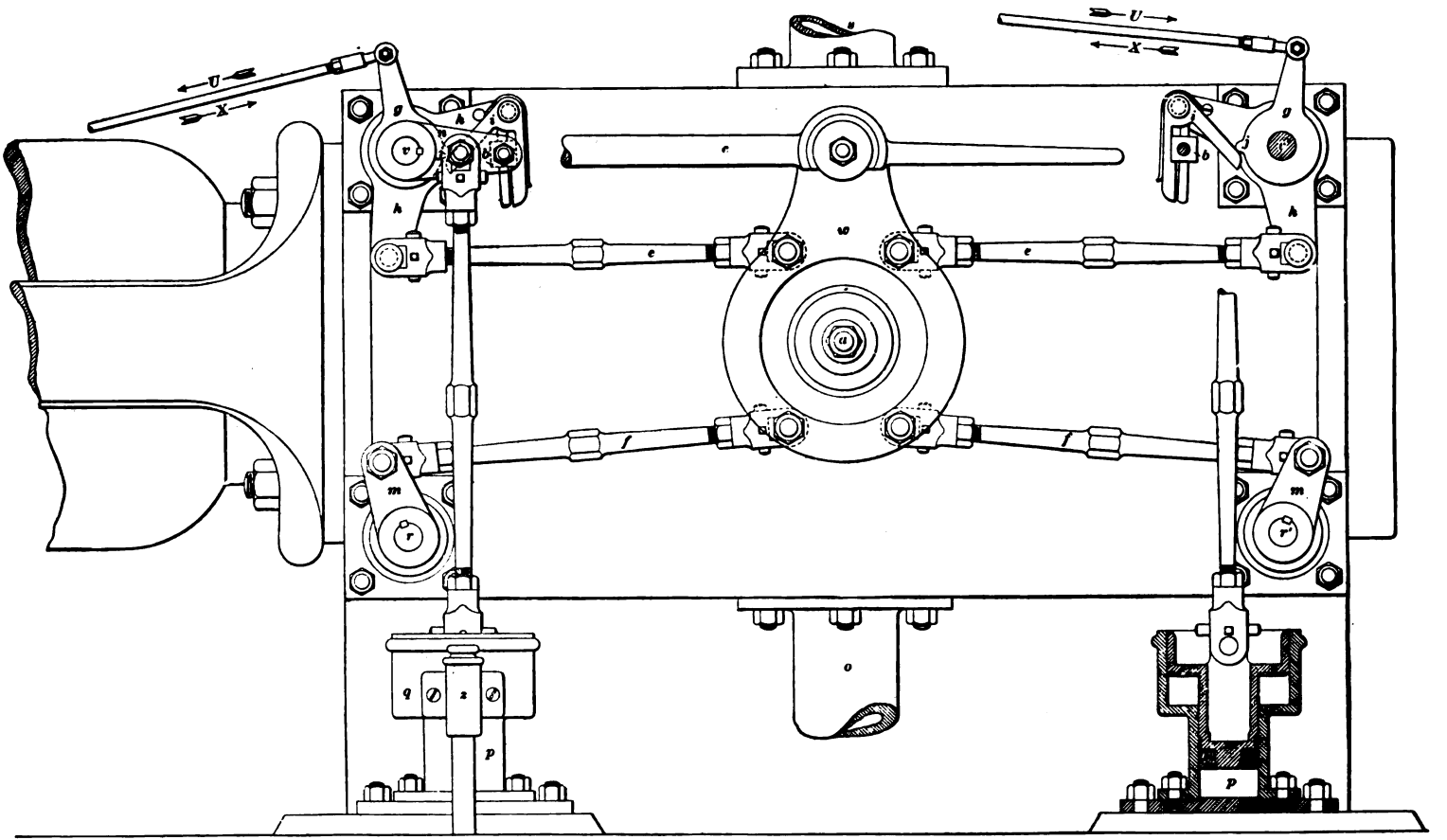

FIG. 27

Digitized by Google

stroke moving in front of the piston and escaping through the port p_1 and exhaust port e. While the piston is moving from the crank end of the cylinder the steam is cut off nearly in the same manner as when it is moving from the head end, and the piston finishes its stroke by virtue of the expansion of the steam that has been admitted to the cylinder.

In Fig. 26, the piston is moving from the head end to the crank end of the cylinder, while the valve is moving from the crank end to the head end, having just reached the point where it cuts off the further admission of the steam to the cylinder. The repetition of these movements results in the

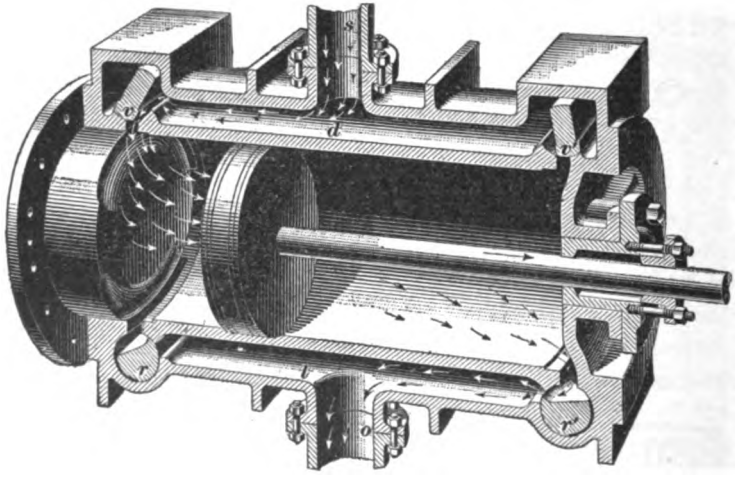

FIG. 28

piston being alternately forced forwards and backwards, the motion being imparted by the piston rod *1*, to the cross-head *2*, connecting-rod *4*, and crank *5*, and finally resulting in a rotary motion of the crank-shaft *7* and flywheel *8*.

26. Corliss Engine.—The Corliss simple engine differs from the simple slide-valve engine in that the steam is admitted into and removed from the cylinder by means of the Corliss valve gear, a mechanism that is used in a large number of engines of different makes. A side elevation of

Digitized by Google

it is shown in Fig. 27, and a section through the cylinder and valves, in Fig. 28. It has four separate and distinct valves. Two of these, v, v', Fig. 28, connect directly with the steam chest d and steam pipe s, and are called *steam valves*. They are rigidly connected with the cranks n, Fig. 27, one of which is removed in order to show more clearly the disengaging link i. The other valves, r, r', Fig. 28, connect directly with the exhaust chest l and the exhaust pipe o, and are called *exhaust valves;* they are rigidly connected with the cranks m, Fig. 27. All the valves are cylindrical in form and extend across the cylinder above and below, respectively.

The disk, or wristplate, w, Fig. 27, is made to rock on a stud a by the eccentric rod c connecting it with an eccentric on the crank-shaft. There are four valve rods: e, e, which connect the wristplate w with the bell-cranks h of the steam valves, and f, f, which connect the wristplate w with the cranks m of the exhaust valves. The valve rods can be lengthened or shortened as the case may require, and the action of any one valve can be regulated independently ofthe others. As the wristplate w rocks backwards and forwards, the exhaust valves r, r', which are rigidly connected with their cranks m, rock with it. The bell-cranks h, which are provided with the disengaging links shown at i are also given this rocking motion, and by hooking on to the blocks b, which are rigidly connected to the cranks n, open the steam valves v, v'.

The projections j on the two trip collars g unhook these disengaging links i after they have rotated the valves v, v' through a certain angle, and the cranks n are pulled to their first positions by the vacuum dashpots p against the resistance of which the valve cranks n were raised. The movements of the valves open and close the steam and exhaust ports of the cylinder at the proper intervals. The pins of the valve rods are so located on the wristplate that the steam valves v, v' have their quickest movement while the exhaust valves r, r' have their slowest, and the exhaust valves have their quickest movement while the steam valves have their slowest. As a consequence of this arrangement, the steam and exhaust valves have entirely independent

Digitized by Google

movements, and the inlet ports may be suddenly opened full width by the quick movement of the steam valves, while the exhaust valves are practically motionless. The advantage of this valve gear is that it permits an earlier cut-off, with a greater range, a more perfect steam distribution, and a smaller clearance space than is attained with the plain slide valve. Engines fitted with the Corliss valve gear cannot be run at much more than 90 revolutions per minute.

27. Governors.—When a steam engine is running at a uniform speed, the work done by the steam in the cylinder must just equal the resistance overcome at the flywheel rim. Should the resistance become less than the work, the amount of work in excess of that necessary to overcome the resistance will cause the moving parts to move faster and faster, and the engine will *race*, or *run away*. If, on the contrary, the resistance should exceed the work, the engine will slow down, and finally stop. The work required of the engine cannot, of course, remain always constant; hence, it is necessary to have some means of automatically adjusting the steam supply to the variation of the resistance; this is accomplished by the **governor.**

Steam-engine governors may be divided into two classes: (1) *throttling governors*, which throttle the steam in the supply pipe, and (2) *automatic*, or *adjustable cut-off, governors*, which regulate the steam supply by changing the point of cut-off of the valve.

The ordinary throttling governor, shown in Fig. 25, consists of a balanced throttle valve placed on the steam pipe s and attached to the spindle k, at the upper end of which are the two flyballs m, m'; the spindle and flyballs form what is known as a *revolving pendulum*. The spindle and balls are driven from the main shaft by the belt x through bevel gears. If the engine moves faster than the desired speed, the flyballs are forced to revolve at a higher speed, and will, consequently, move outwards and upwards through the action of centrifugal force; this forces the spindle k downwards, and partly closes the throttle valve.

Digitized by Google

The engine thus takes less steam, and the speed falls to the desired point, the governor balls in the meantime returning to their original position. Should the resistance become greater than the power of the engine, it slows up slightly, the balls drop and open the valve wider; more steam is thus admitted and the engine immediately regains its original speed. The chief objection to the throttling governor is that the steam is *wire drawn*, or *throttled*, these being the terms applied to cases in which the steam pressure is reduced owing to the insufficiency of valve opening. Steam is more or less wire drawn in all engines fitted with plain slide valves because the movement of the valve is comparatively slow when closing the ports. With Corliss and other releasing-gear engines, the valve movement at cut-off and release is very rapid, and the wire drawing very slight.

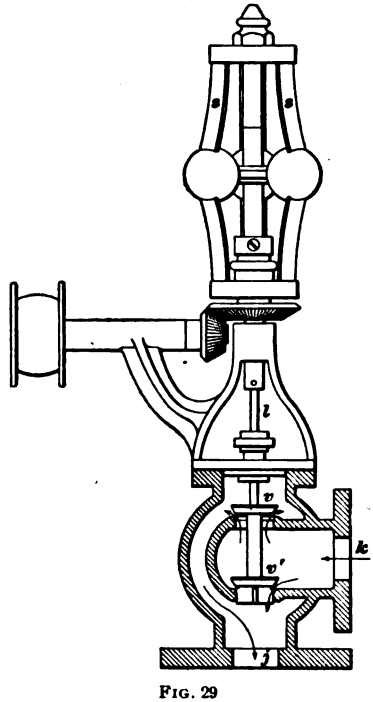

FIG. 29

The well-known *Pickering governor* is shown in Fig. 29. As the three balls move outwards against the resistance of gravity and the three flat springs *s*, they lower the valves *v*, *v'*. The steam enters at *k*, flows in the direction of the arrows, and then through *j* into the steam chest. Since steam is on both sides of the valves, they are balanced. The object of using two valves instead of one is to afford a large opening with a small lift of the valve.

28. As applied to the Corliss type of engines, the revolving pendulum or flyballs vary the point of cut-off instead of

Digitized by Google

throttling the steam supply. The method of operation is shown in Fig. 30; the flyballs m, m' are here given a rotary motion by a belt, pulleys, and gears, in the same manner as in Fig. 25.

Let it be supposed that the engine is running at its proper speed; the flyballs will be held in their normal position by the balance existing between the centrifugal and gravity forces acting on them. Should the speed of the engine increase from any cause whatever, the centrifugal force acting on the flyballs will also increase and will throw them out; that is, increase the diameter of the circle in which they rotate, until a new balance is effected between the centrifu-

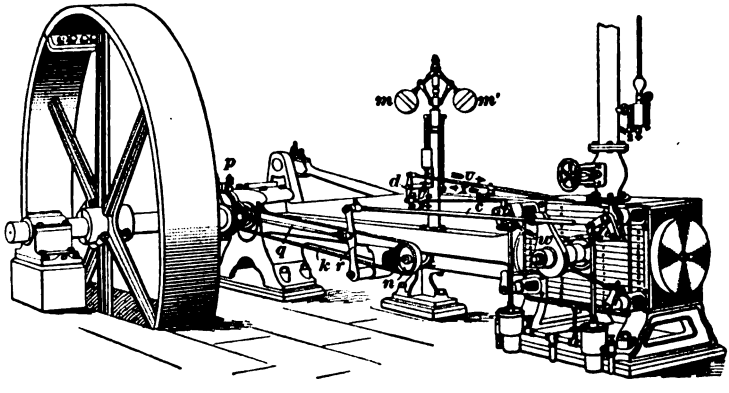

FIG. 30

gal force and the attraction of gravity. This movement of the flyballs will be transmitted to the lever d, Fig. 30, causing it to turn slightly about its center, thereby moving the rods, connecting it with the trip collars g, Fig. 27, in the direction X, compelling the collars to turn through a small angle in such a direction that their projections j will unhook the disengaging links i, earlier in the stroke. This will cause the point of cut-off to occur earlier in the stroke and a decrease in the speed of the engine, on account of the reduction in the amount of steam admitted to the cylinder, and an increased ratio of expansion of the steam under the same initial pressure. Should the speed from any cause diminish, a reverse

Digitized by Google

operation will be the result. The flyballs will drop slightly; *d*, Fig. 30, with the rods, will move in the directions indicated by the arrow *U*, and the trip collars *g*, Fig. 27, will be rotated in such a manner as to cause their projections *j* to unhook the disengaging links *i* later in the stroke; the cut-off will then occur later in the stroke, and a diminished ratio of expansion at the same pressure will again bring the speed up to its proper point.

29. Condensers.—As already stated, engines may be of the non-condensing or of the condensing type. In the former, the exhaust steam from the cylinder passes directly into the atmosphere; therefore, the back pressure, or pressure against the motion of the piston, must at least equal the pressure of the atmosphere, which is 14.7 pounds per square inch. Since the exhaust steam has a slight pressure after passing through the engine, the back pressure in non-condensing engines is usually from 16 to 19 pounds per square inch. In a condensing engine, the exhaust steam from the cylinder is condensed to water, so that a partial vacuum, or pressure less than that of the atmosphere, is formed in front of the moving piston. In good condensing engines, the back pressure in the engine is sometimes as low as 2 pounds per square inch.

There are two types of condensers in general use—the *surface condenser* and the *jet condenser*. In the former, the exhaust steam comes in contact with a large area of metallic surface, which is kept cool by contact with cold water; in the latter, the exhaust steam, on entering the condenser, comes in contact with a jet of cold water. In either case, the entering steam is condensed to water, forming a partial vacuum. If a sufficient amount of cold water were used, the steam, on entering, would instantly condense and a practically perfect vacuum would be obtained, were it not for the fact that the feedwater of the boiler always contains a small quantity of air, which passes with the exhaust steam into the condenser and partly destroys the vacuum. To get rid of this air, the condenser is fitted with an air pump, which

Digitized by Google

pumps out both the air and the water into which the steam condenses.

30. Compound engines are sometimes used for driving textile mills; they have two cylinders in which the steam expands. The first, or *high-pressure, cylinder* takes the steam from the boiler at a high initial pressure, while the second, or

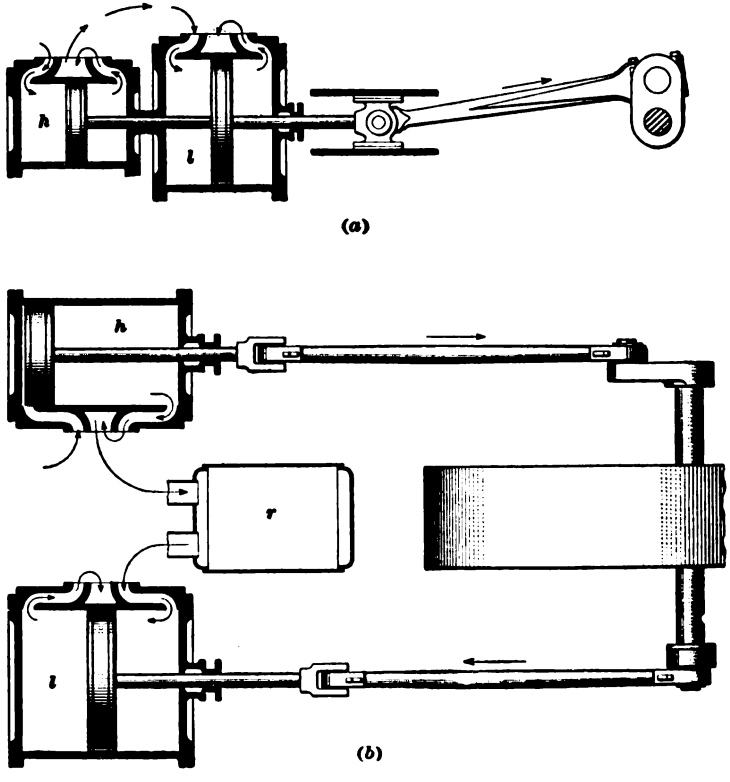

FIG. 31

low-pressure, cylinder is of a larger diameter and is arranged to take the exhaust steam from the first cylinder and expand it still further. When the expansion takes place in two cylinders the engine is said to be *compound;* but if the expansion takes place in three cylinders, it is said to be a *triple-expansion engine*, or if in four cylinders, a *quadruple-expansion engine.*

Digitized by Google

Compound engines are usually made in one of the two types shown in Fig. 31. In (*a*) the two cylinders are placed in line, the two pistons being attached to the same piston rod. The steam passes from the boiler into the high-pressure cylinder *h*; after it has expanded, it passes into the low-pressure cylinder *l*, from which it is exhausted into the atmosphere or into a condenser.

Fig. 31 (*b*) shows what is known as the *receiver compound engine*. The steam passes from the high-pressure cylinder *h* into a receiver *r*, and then into the low-pressure cylinder *l*, from which it exhausts into the atmosphere or into a condenser. A receiver compound engine has two piston rods and two cranks; the cranks may be placed at any angle with each other. The compound engine, without a receiver, may have one piston rod and one crank, as shown in the tandem type, or it may have two piston rods and two cranks, the cylinders being placed side by side. In any compound engine without a receiver, the two pistons must begin and end their stroke at the same time, and the cranks must be placed together or 180° apart.

When one cylinder is placed behind the other, as shown in Fig. 31 (*a*), the engine is called a *tandem compound*. When the cylinders are placed side by side, as shown in (*b*), and the piston rods are attached to separate crossheads, the engine is called a *cross-compound;* if both piston rods are attached to the same crosshead, the engine is called a *twin compound*. If any of these types of engines have a condenser, they are called *tandem*, *cross-*, or *twin*, *compound condensing engines*. Without a condenser, they are called *non-condensing engines*. They all may or may not have a receiver.

In giving the size of a multiple-expansion engine, the stroke is always written last. Thus, a compound engine whose high-pressure cylinder is 11 inches in diameter; low-pressure cylinder, 20 inches in diameter; and stroke 15 inches will be expressed as a 11″ and 20″ × 15″ compound. In the same manner a 14″, 22″, and 34″ × 18″ triple-expansion engine would indicate that the diameters of the cylinders are 14, 22, and 34 inches, and that they have a common stroke of 18 inches.

Digitized by Google

WATER-POWER

31. The utilization of **water-power** for driving the machinery of a mill necessitates the location of the mill near a suitable stream, preferably where there is an existing dam and canal system, as otherwise the mill will have to install its own system. The value of a water-power depends on the steady power that it will furnish at all seasons of the year. When a stream is so located that the surplus water of freshets and storms can be easily stored by means of reservoirs, it can be made to furnish at all times a power whose maximum value depends on the mean discharge of the stream. In some locations, a stream that would be of no practical value as a source of power, owing to the fact that the rainfall from which it is supplied varies greatly at different seasons of the year and the watershed is of such a nature that the water flows off rapidly, may be made to furnish a uniform and reliable supply of water by the means of reservoirs. It is seldom that these reservoirs can be located where the water can be used from them directly, but during periods of high water they store a surplus that can be drawn on to furnish a supply during low water.

The value of a proposed location for a water-power plant must be based on the following considerations: (1) the available fall; (2) the minimum flow of the stream; (3) the effect of high water on the available fall; (4) the possibility of building storage reservoirs for the purpose of regulating the flow and furnishing a supply of water during periods of drought.

It is very important that the pipes or channels leading the water from the dam, or weir, to the waterwheel be made amply large and so arranged that as little *head* as possible will be lost through friction. If a canal or sluice that is to lead water from a dam to a flue or waterwheel is too small to carry the required amount of water, great loss of power will result. In the case of a long pipe, the frictional resistances may be so great that the pressure at the end of the pipe will be greatly reduced, thus greatly reducing the

Digitized by Google

power. In short pipes leading from dams to wheel cases, flumes, or penstocks, the velocity of flow is often comparatively high, but the loss of head due to resistances at entrance of pipe, bends, sudden changes of section, etc. is more serious than in the case of long pipes and low velocities. A careful computation, in which all the conditions are considered, should always be made for each case in order to provide against losses of head between the supply and the wheel.

For motors, the *turbine* has replaced the older overshot, breast, and undershot waterwheels in American mill practice. The impulse wheel, of which the Pelton and Leffel Cascade waterwheels are notable examples, give very efficient service under high heads and small quantities of water, but as these conditions are rarely met with in mill work they are seldom used.

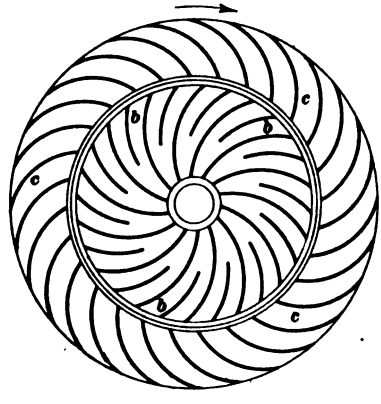

FIG. 32

TURBINES

32. Types of Turbines. — The several types of **turbines** differ mainly in the method of passing the water through the machine. Fig. 32 shows the general arrangement of an *outward-flow turbine*, also called a *Fourneyron turbine*, from its inventor, with a plan of the wheel vanes and guide vanes. The water is brought in at the center, passes outwards between the curved guide vanes b, b to the wheel vanes c, c, and is discharged at the circumference of the wheel. The flow of water is regulated in the wheel shown by a cylindrical gate that can be raised or lowered in an annular space between the wheel and guides. Various other methods of regulating the flow are also used, some of which will be described.

Digitized by Google

Fig. 33 shows a vertical section of an *inward-flow*, or *Francis*, *turbine*. Here the water enters the guides *b* from the outside, passes inwards to the wheel vanes *c*, and is discharged near the center of the wheel. These wheels are often placed some distance above the level of the tail-water, as shown, and discharge into an air-tight tube, commonly called a *draft tube*. This places the wheel at a point where it can be easily inspected or repaired and at the same time utilizes the total fall. The supply of water in the wheel shown is regulated by a gate *g* at the outlet of the draft tube.

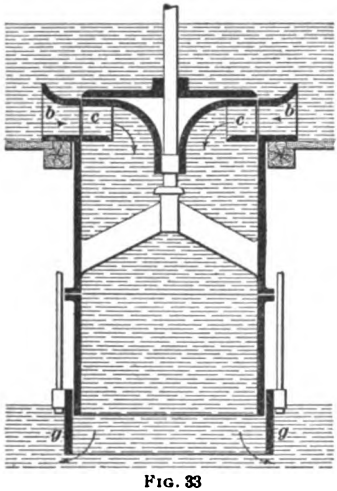

FIG. 33

In Fig. 34 is shown a *downward-flow*, or *Jonval*, *turbine*. Here the general direction of the flow of the water is always parallel to the shaft *a*, or axis; hence, wheels of this class are also known as *parallel-flow*, and *axial*, *turbines*. The water usually enters the guides *b* from above and is discharged, downwards, through the wheel *c* into a draft tube *d*, as shown. The discharge may also take place into the air or tail-water without the use of a draft tube.

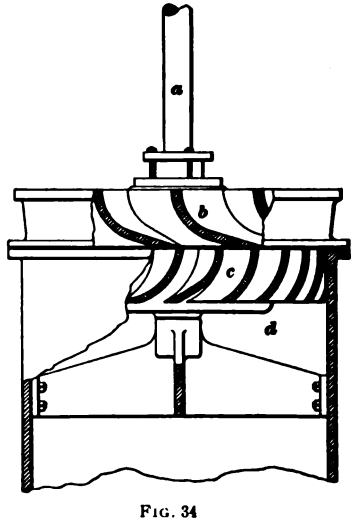

FIG. 34

Many American turbines are made with the wheel vanes so curved that the water enters the wheel in a radial direction, like an inward-flow turbine, and is discharged

Digitized by Google

in a downward or axial direction. These are called *mixed-flow turbines.*

Fig. 35 shows the wheel of a *Risdon turbine* with the double curvature of the vanes. This wheel is cast in one piece. The band *a* serves the double purpose of strengthening the wheel and of making the proper form for the passage of the water through the lower part of the wheel, confining it on all sides.

33. Regulating Turbines.—The method of regulation has an important bearing on the efficiency of a turbine. In general, the best efficiency for a given head is obtained only when the wheel is running at the speed for which it was designed and at *full gate*, that is, with the gate wide open. A partial closing of the gates reduces the available head or increases the frictional losses in the wheel itself, either of which results in a loss in the energy available for doing useful work. If the supply of water is unlimited, the loss in efficiency with partly closed gates is a matter of little or no importance, since the only object is a reduction of the power of the wheel to correspond with the work to be done. When, as is more often the case, however, it is desirable to obtain the greatest possible work from the stream at low water, and this work is less than the wheel is designed to furnish at full gate, it becomes necessary to run the wheel at partly closed gate, or part gate, the loss in efficiency becomes more serious.

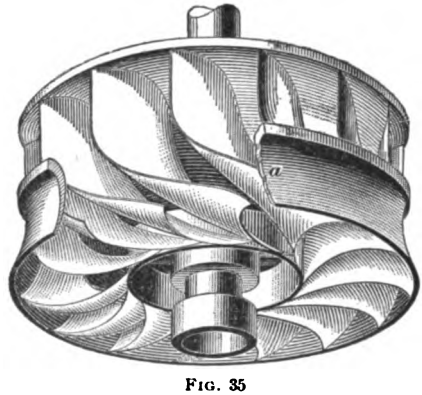

FIG. 35

One of the simplest methods of regulation is shown in Fig. 36. The area of the passages through the wheel is not changed, but the head is reduced by varying the opening of

Digitized by Google

the gate that admits the water to the flume, or penstock, *b*. The flow through the wheel is thus reduced, but there is a loss of head equal to the distance between the level of the water in the sluice and the level in the penstock.

When turbines are governed by regulating the discharge from the draft tube, as shown in Fig. 33, the head above the wheel is not reduced when the discharge is decreased, but the pressure in the draft tube is increased, which has the

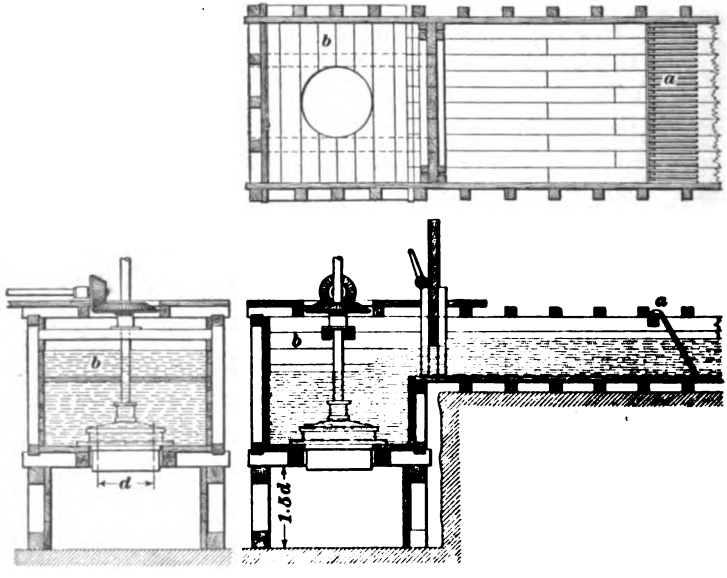

FIG. 36

same effect as raising the level of the tail-water. The result is a loss in the available head and a consequent loss in efficiency.

Regulation by means of a cylindrical gate between the guides and wheel vanes produces a sudden change in the cross-section of the passages at part gate. This absorbs energy by the production of eddies and foam and the contraction of the stream as it flows from the reduced section. When the turbine runs above the tail-water and without a draft tube, this method of regulation may reduce the flow

Digitized by Google

through the wheel so much that the space between the buckets will be but partly filled, in which case it becomes an impulse wheel and its action similar to the action of an impulse turbine.

A method of regulation that gives better results is to have the wheel made in sections. Fig. 37 shows a double downward-flow turbine known as the *Geyelin-Jonval*, in which both guide and wheel vanes are in two independent, concentric sections. The inner section $a' b$ may be closed by lowering the cylindrical gate o, or the outer section $a b'$ by lowering the gate p. In this way, either section may be used alone or both may be used together, and a wide range of power may thus be obtained without a serious sacrifice of efficiency.

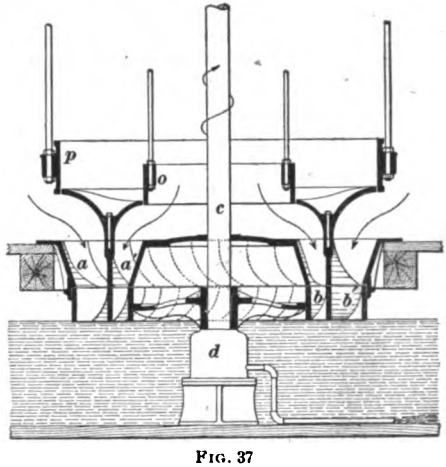

FIG. 37

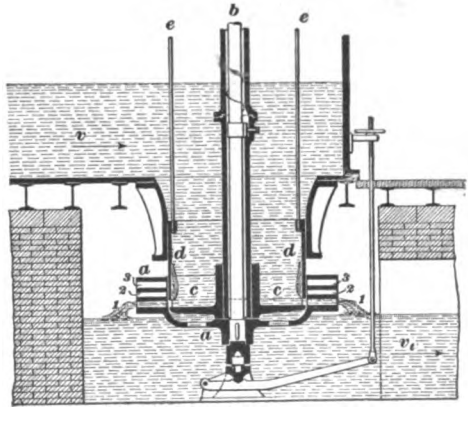

FIG. 38

Fig. 38 shows an outward-flow turbine in three sections *3*, *2*, *1*, formed by dividing the spaces

Digitized by Google

between the wheel vanes by horizontal partitions; *d* is a cylindrical gate between the wheel and guide vanes that entirely closes the successive passages as it is lowered.

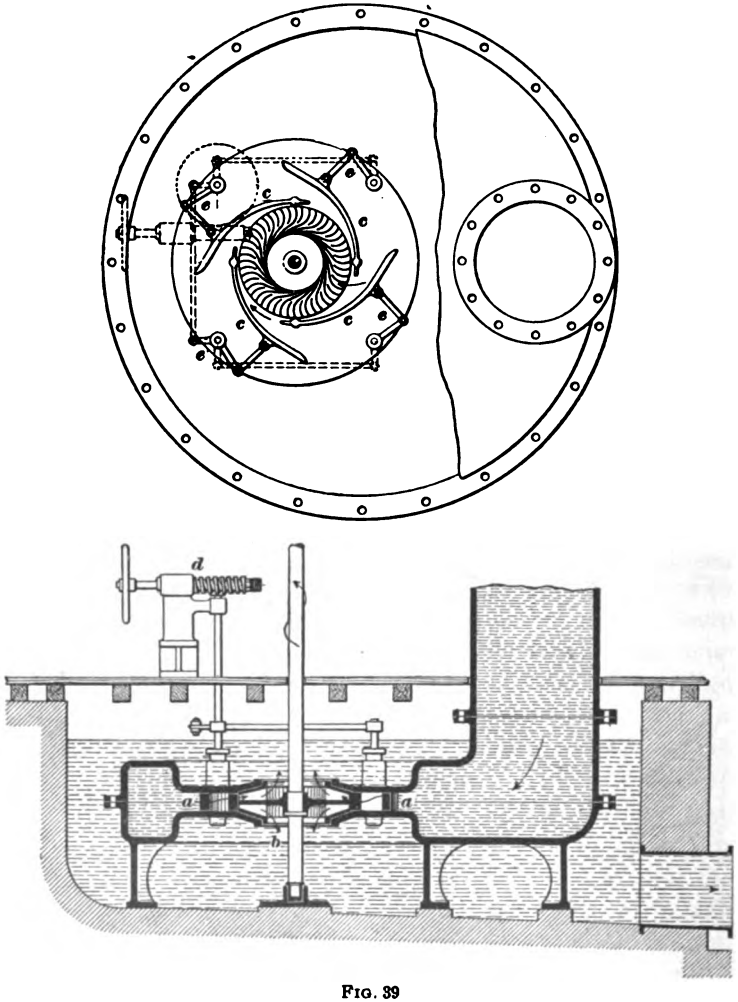

FIG. 39

This improves the action of the wheel at part gate, but the partitions offer extra resistance to the passage of the water at full gate.

Digitized by Google

Fig. 39 shows a plan view partly in section and a sectional elevation of the *Thompson vortex wheel*, an inward-flow turbine in which the flow is regulated by varying the opening between the guide vanes. The four guide vanes *c* are pivoted near their inner ends and the opening between them is regulated by the hand wheel *d*, which swings the outer ends of the guides by means of the combination of worm, worm-gear, links, and levers. This forms what is known as the *register gate*, from its resemblance to a register used in regulating the flow of air through a heating flue from a furnace. It will be seen that this change in the position of the guide vanes changes the angle of the entering water so that, with a given number of revolutions of the wheel, entrance of the water without shock can only occur for a certain gate opening.

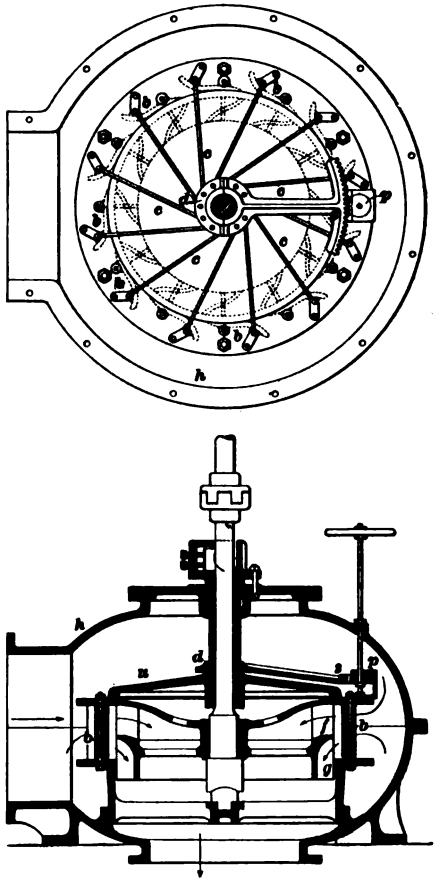

FIG. 40

34. Examples of Turbines.—Fig. 40 shows a top view and a vertical section of a *Leffel turbine* with a somewhat spherical-shaped cast-iron casing *h*. The wheel has two sets of vanes, one *f*, shown in the section, discharging

Digitized by Google

inwards and the other *g*, discharging downwards. The two sets of buckets are separated by a partition that forms part of the rim of the wheel, the wheel being a solid casting. For these two sets of wheel buckets there is but one set of guides and the water is admitted equally to each set of wheel vanes at all gate openings. The guide vanes are made to swing in a manner similar to the guide vanes of the Thompson vortex wheel. A pinion *p* that is operated by a hand wheel or governor, gears into a sector *s* that rotates a collar *d*, to the under side of which are attached the rods *c* that transmit the motion of the collar to the vanes. In this way, the vanes, being pivoted near their inner ends, open and close in a manner similar to the vanes of a register; consequently, this belongs to the class of register-gate turbines.

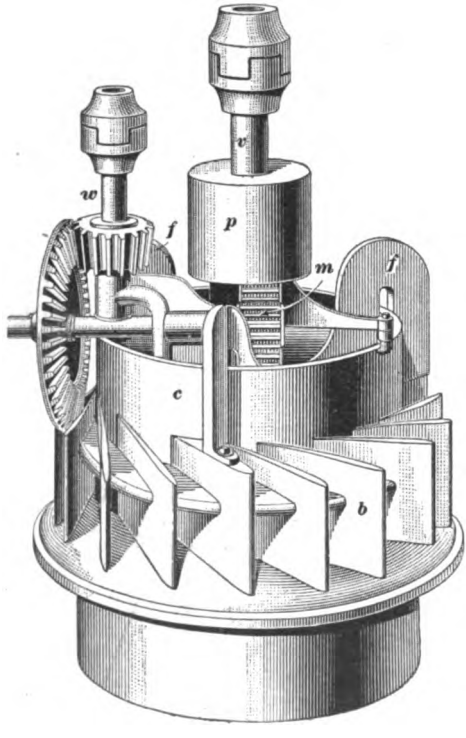

FIG. 41

Fig. 41 is a general view and Fig. 42 a section of a *cylinder-gate Risdon turbine;* this is a mixed inward- and downward-flow turbine, the wheel of which is illustrated in Fig. 35. The gate consists of a cylinder *c* that works in a space between the wheel *a* and the guide vanes *b*. Projections *d*, cast on the cylinder *c*, move up and down between the guides and guide the water into the wheel with

Digitized by Google

less resistance and contraction than would occur if the water were forced to enter past the sharp edge of a thin cylinder.

The gate is raised and lowered by means of a rack and pinion *m*, operated by a hand wheel or governor acting through the shaft *w* and the bevel gearing; U-shaped

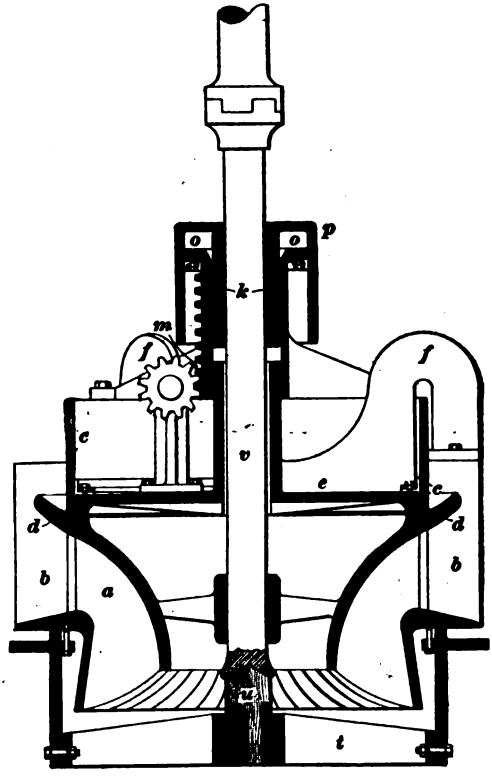

FIG. 42

pieces *f*, *f* support the *crown e* and rest on the guide vanes. A stationary cylinder *p* is supported by the crown plate and contains a piston *o*, *o* that balances the weight of the gate by the action of the pressure of the water under it. The wheel shaft *v* is supported by the wooden step *u* and the bearing *k*. Fig. 43 shows the *McCormick turbine*, a cylinder-gate wheel

Digitized by Google

in which the gate is operated through the bars *b*, *b* by means of the two racks and pinions and the bevel gearing.

Fig. 44 is a perspective view, Fig. 45 a horizontal section through the guide vanes and wheel, and Fig. 46 a top view

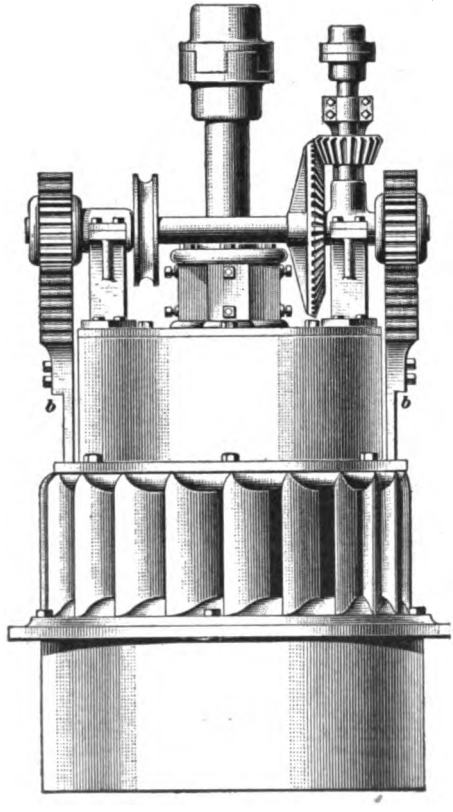

FIG. 43

of the *New American turbine*. This is a modified form of register gate, in which the guide vanes consist of a fixed portion *a* and a swinging gate *b*. The gates are operated through the shaft *s*, the pinion *p* and sector *r*, the collar *c*, and the rods *d*. An adjustable bearing *o* is provided for the wheel shaft. Fig. 47 is a perspective view of the wheel

Digitized by Google

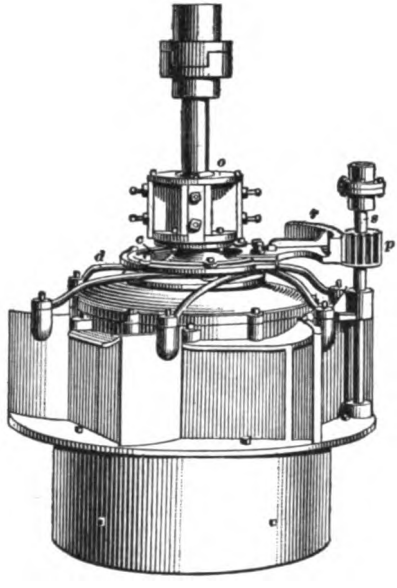

FIG. 44

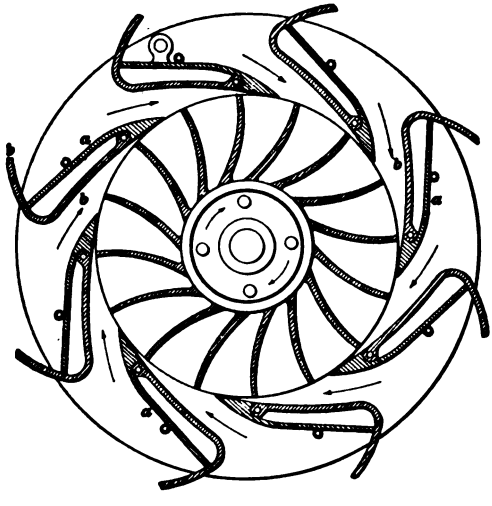

FIG. 45

Digitized by Google

of the New American turbine, showing the step bearing *e*, which rests on a conical wooden step in the wheel case.

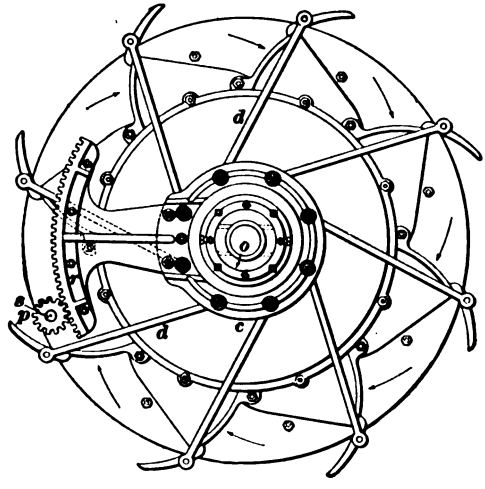

FIG. 46

Formerly turbines were mounted on a vertical shaft, but owing to the difficulty in transmitting large amounts of power from a vertical shaft, they are now commonly mounted on horizontal shafts, sometimes singly and sometimes in pairs. The water is usually led to the turbine through an iron flume or penstock and removed from it through an air-tight draft tube, the lower end of which is a few inches below the surface of the tail-water. When the load is at all variable, an automatic speed governor should be applied to turbines.

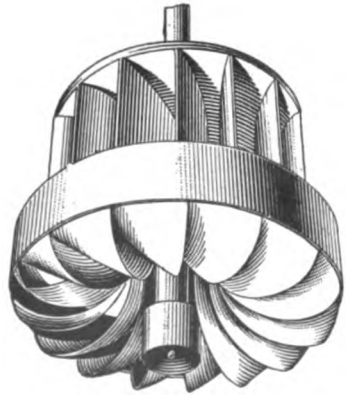

FIG. 47

Digitized by Google

HEATING, VENTILATING, AND LIGHTING

HEATING

DIRECT SYSTEM OF HEATING

35. The **heating** of a mill is necessary only during the colder months of the year, and in some parts of the South only for a very brief period even then. Artificial heat is necessary during a period of cold weather, in order to raise the temperature high enough to make working conditions comfortable for the help; to enable the stock to be worked to advantage, which is not possible when the fibers are in a cold condition; and in some localities, where very humid atmospheric conditions are liable to occur, to protect the delicate parts of the machinery, such as card wire, from dampness and prevent the collection of moisture on polished surfaces.

Two methods of heating are in use in textile mills; namely, the *direct* and the *indirect systems*. With the **direct system**, the mill is heated by means of lines of uncovered steam pipes arranged around each room and supplied with live steam from the boiler or exhaust steam from the engine, the atmosphere of the rooms being heated by the radiation of heat from the surface of these pipes. With the **indirect system**, air heated at some central station is conveyed to the rooms to be warmed by means of flues or air ducts, which are usually built into the walls of the structure. With an equipment of this kind arrangements are usually made for the foul air to pass out through other air ducts, thus insuring a good system of ventilation. The indirect system is often spoken of as the *hot-air system*, while the direct system is known under the general name of *steam heat*.

Digitized by Google

36. Live Steam.—The direct system of heating may be subdivided into heating with *live steam* and heating with *exhaust steam*. In the case of a mill heated with live steam, the steam from the boiler is passed through a reducing valve so that the pressure is reduced from the extremely high pressure at which it is generated to a pressure that it is safe to apply to the steam piping throughout the mill. To send steam into ordinary steam-heating pipes in a mill at a pressure of 100 pounds, or more, to the square inch, would result in burst pipes and broken joints. Therefore, at some point near the boiler a reducing valve is inserted in the supply pipe that will reduce the pressure to from 25 to 35 pounds to the square inch.

37. Exhaust Steam.—When exhaust steam is used for heating, it is taken from the engine and is already at a low pressure, as it is the steam that has been expanded in, and exhausted from, the cylinder. Heating with exhaust steam can only be done in mills that have so-called high-pressure engines; that is, an engine without a condenser. In those engines where a condenser is used, the steam, of course, is condensed into water and ceases to exist as steam. In mills where exhaust steam is used for heating purposes there is a back pressure on the engine proportionate to the pressure of the heating system. In other words, the pressure of the live steam on one side of the piston has to overcome the back pressure on the other side of the piston, thus reducing the efficiency of the engine; many millmen do not approve of the use of exhaust steam on this account. However, if this system is properly installed, with large heating pipes and all arrangements made so as to use as low a pressure of steam as possible in the heating system, the back pressure can be reduced to a minimum and the mill heated economically without excessive detriment or waste of coal.

38. Condensation Water.—As will be readily understood, there is considerable condensation of steam in the heating pipes, whether live or exhaust steam is used, and this condensation water must be automatically removed.

Digitized by Google

Where live steam is used all, or almost all, the steam pipes in the mill can be so arranged that the condensation water will flow directly back to the boiler, as the pressure on the pipe can be made sufficiently high to force this water back if a gradual fall is given to the piping in each room and its subsequent connection to the boiler. The object of this is to utilize the warm water from the heating pipes to feed the boiler and thus save coal by not having to raise the temperature of the feedwater from the normal temperature to the boiling point. Besides this it is much better for the boiler itself to be fed with warm water instead of cold, as it prevents unnecessary strain through unequal expansion and contraction caused by feeding cold water.

Where exhaust steam is used there is not sufficient initial pressure on the heating system to force the condensation water back to the boiler and in this case the hot water of condensation is conducted to a tank, called a receiver, from which it is returned to the boiler by an automatic pump so arranged as to operate only when there is sufficient water stored in the receiver to make it necessary to return the same to the boiler. Such a plan is much superior to that adopted in some mills, especially small ones, of conducting the condensation water to a steam trap that allows it to flow into the drains. The heat contained in this water is thus wasted.

39. The whole system of steam heating should be considered with relation to the locality in which the mill is built. If a mill in a warm climate is equipped with an exhaust system of steam heating, when the heat is only required for a short time, the system is useless throughout the remainder of the year and the exhaust steam is wasted and unnecessary back pressure is put on the engine, unless arrangements are made to change this back pressure when the heating of the mill no longer becomes a necessity. For mills in a warm climate, therefore, the live-steam system of heating is preferable.

In mills in colder climates the exhaust system can be used to advantage for a much longer period and therefore is more

Digitized by Google

desirable; but even in such climates, where there is a good supply of water for condensing purposes, it is better to generate the greatest possible power in the engine, by condensing the exhaust steam, and heat the mill with live steam.

In installing a steam-heating system it should always be borne in mind that to raise water to a high temperature requires the consumption of coal or wood, and that any waste of heated water means a waste of fuel.

40. Details of Direct-Heating System.—The following description of a direct system of heating is applicable to either a live-steam or an exhaust-steam system, since the chief difference is that with exhaust steam larger piping is generally used because the pressure of steam in the pipes is lower, the condensation greater, and the radiation per square inch less with a low pressure than with a high one. As the satisfactory heating of a mill depends on the amount of heat radiated by the pipes, a larger radiating area must be provided when the amount of heat radiated per square inch is less.

The main supply pipe from the boiler or engine is run vertically through the mill, usually at some point near the boiler house, and at each floor is provided with suitable connections by which the supply can be taken for each room. This main supply pipe is the largest in the whole system and its largest diameter is at the point nearest the boiler. It may be reduced in size at points farther from the boiler after one or more feedpipes have been taken from it. Between the main supply pipe and the boiler is a valve that regulates the entire supply of steam to the whole system, and also the reducing valve previously referred to. The former is, of course, closed during the summer months, thus saving all heating expense and having no detrimental effect on the efficiency of the power plant during this time.

It is usual to run several lines of pipe down the sides of each room, not far from the ceiling and as near as possible to the windows, so that the cold air that percolates through the window sashes will be warmed at once, and also because

Digitized by Google

the rooms are chilled more in the neighborhood of the windows than at any other point. The motion of the belts and pulleys near the ceiling keeps the air in motion and transfers the heated air toward the center of the room.

By this system very little fresh air is admitted to the room, and in consequence of the same air being kept in motion and being breathed over and over again it becomes vitiated and foul, which is not the case with an indirect, or hot-air, system of heating. On each floor is a horizontal supply pipe that is provided with a valve and connected with the main supply pipe. It is large enough to supply all the smaller lines, which are connected to it by a manifold branch T. The lines of pipe are suspended from the ceiling by vertical rods holding a number of rolls on a horizontal rod in such a way that the lines of piping are placed horizontally, there being three, four, five, or six lines of small pipe, generally from 1 inch to 1¼ inches in diameter. These are supplied from the main supply pipe and are hung so as to have a gradual fall lengthwise of the room of about ⅛ inch to the foot. Thus, in the case of a room 200 feet long the supply end will be perhaps 6 inches from the ceiling and at the other end of the room the pipe will hang 31 inches from the ceiling.

The object of suspending the piping on supports carrying rollers that can revolve on a rod is so that the pipe may expand or contract in different temperatures with a minimum of strain throughout its length. It should also be arranged so that in some part of the system, between the connections to the supply and to the return pipes, the lines of pipe will form a right angle, so that when heated they may expand without breaking any joints or putting strain on the vertical supply or return pipes, as would otherwise be the case. The increased length merely bends the short connecting piece at the angle out of its normal position.

41. To provide for the removal of the water of condensation, at the lower end of the lines of pipe after they are bent at right angles, all the pipes are conducted into a

Digitized by Google

manifold T to which the return pipe is connected. This is a vertical pipe running through each floor of the mill and carried down far enough to take all the returns from each room; but in case of heating with live steam it never runs low enough to deliver at a lower point than the top of the boilers, as it has to be conducted with a gradual fall so that the water may flow back into the boiler. This is on the gravity system. The return pipe is always as small as possible and certainly should always be smaller than the main supply pipe, because condensed steam occupies less space than does live steam, and consequently can be returned through a smaller pipe.

A valve should be placed at the supply end of each series of the heating piping so that the heat can be shut off. A check-valve should also be placed at the return end. This will allow steam and condensation water to pass through it in an outward direction from the room, but closes on its seat and will not allow steam or water to enter in the opposite direction. The object of this is to prevent any part of the supply of steam, when shut off from a certain room, finding its way back into the system from the return pipe, as it otherwise might do from some other room or from the boiler. In addition to the check-valve it is also advisable to have an ordinary valve placed on the return pipe, so that it can be used in case the check-valve should be out of order or require repairs at any time; air valves should also be placed on each series of heating pipes, made so as to open when the heat is shut off and the steam in the pipes condenses and tends to form a vacuum.

42. The description that has been given of the lines of heating pipe on one side of the room applies also to those on the other side of the room, and to those in different rooms of the mill. These lines of heating pipe are fed from the main supply pipes, and all ultimately return into the same return pipe, so that steam can be admitted to all or any one or more of them at the same time and the condensation water flow back to the boiler from the whole or a portion

Digitized by Google

of them concurrently. One or more systems can thus be shut off and only certain rooms heated as desired. It is important in the erecting and hanging of this pipe that at no point in the whole system should there be what is called a *pocket;* that is, a place where the pipe begins to rise again, thus allowing the water to collect without having any means of flowing away. Any such pocket in piping will cause what is called *hammering*, the steam supply being forced against this body of water, in such cases making the system noisy and ultimately breaking the joints.

The number of lines of piping that are required in each room depends on the location of the mill as regards climate; also, on the size of the room and other circumstances. Southern mills require fewer lines of piping than Northern, and narrow mills fewer than wide mills. It may be stated as a general rule that in the North for a mill 50 feet wide there would probably be four or more lines of 1¼-inch pipe on each side of the room; for a mill 75 feet wide, five lines of 1¼-inch pipe; and for a mill 100 feet wide, five lines of 1½-inch pipe. In Southern mills three lines of 1-inch pipe would be sufficient on each side of a room 50 feet wide; in a mill 75 feet wide, three lines of pipe 1¼ inches in diameter; while a 100-foot mill would have four lines of 1¼-inch pipe. Upper floors usually have an extra line of pipe.

43. Where low-pressure exhaust steam is used the same method of installing the pipe is adopted, but all the returns are conducted to a tank connected to an automatic pump. When sufficient water is gathered in this tank it raises a float and admits steam to the pump, which begins to operate and pump the water back to the boilers. This system is also adopted in those mills where the boilers are at a higher elevation than certain lower rooms of the mill or basement and from which, consequently, the water cannot flow back to the boiler.

In some mills the pipes are placed underneath the windows along each side of the room. In some respects this is an advantage, because the heated air always has a tendency to

Digitized by Google

rise and the rooms can be kept warm more easily by such a plan, but the piping takes up valuable space and is an obstruction in some cases.

INDIRECT SYSTEM OF HEATING

44. The direct system of heating does not provide any means of ventilating the rooms, although in some cases the outward flow of the foul air of the room through the cracks of the windows and doors, combined with the inward flow of the outer air by the same channels, will produce a complete change of air within certain periods. In the best modern mills, however, the indirect system of heating is adopted. In the descriptions of heating and ventilating that have been given as well as those that are to follow, the word *duct* indicates a line of piping that runs horizontally, while the word *flue* indicates those pipes that run vertically.

The principle of the indirect system of heating is that of constantly supplying the rooms of the mill with fresh air that has been warmed to a certain temperature by a suitable apparatus. This apparatus usually consists of a heating chamber, or duct, situated in the lower part of the mill, that is supplied with a number of heating coils; and a fan, by which cold air is drawn from the outer atmosphere, forced through these coils of piping, becoming heated at the same time, and then conducted to each room of the mill by means of ducts and flues. Fans are not always used, as a circulation can be induced by the heated air rising through the flues, but fans are preferable, as the flow of air is then positive and can thus be conducted to the extreme portions of the mill. The ideal method of heating buildings by this means is to have the warm air discharged from openings that are situated in the center of the room near the ceiling and pointing toward the walls of the building. By this means, the warm current of air is discharged directly toward the coldest part of the room—the walls.

In buildings that are divided by partitions, this method of distributing the warm air can be readily accomplished. In

Digitized by Google

textile mills, however, the uniform size and arrangement of the machines within such a building requires straight and roomy passageways between the different machines, as well as sufficient space around them for their operation; consequently, there is no practical opportunity for the introduction of heating flues anywhere within the center of the building, because of their interfering with this desired uniformity. In order to overcome this difficulty, it is the custom in mills heated in this manner to conduct the warm air through flues that are located in the walls of the building.

45. As has been previously stated, the heating apparatus of the indirect system consists of a large duct placed in the lower part of the mill. When the mill contains a basement it may be situated in this part, and the wall of the basement will serve as one side of the duct. When, however, the mill does not contain a basement, it is necessary to have this duct situated above ground, but in this case also the wall of the mill may serve as one side of the duct. There are two methods of running flues from this main duct, one of which employs galvanized-iron flues running up the walls of the mill and distributing air to each room. The second method, and the one that is recommended, is that of having openings in the brickwork of the walls, which serve as flues for conducting the warm air. These flues may be placed along one side of the structure only and at intervals of from 40 to 70 feet, according to the character and construction of the building. They decrease in size as they extend upwards, in order to compensate for the air delivered to the various floors.

At a distance below the floorbeams, sufficient to avoid weakening the construction, outlets are provided from the flues into each of the rooms. Each opening is also fitted with a special damper, which consists of a cast-iron frame bricked into the wall and sufficiently strong to prevent weakening the same. Pivoted to the top of this frame and swinging out toward the center of the room is a sheet-iron plate, which serves as a damper and deflector and is adjustable by means

Digitized by Google

of a worm on the end of a vertical rod acting on a gear on the axis of the damper to move it to any desired position. The velocity with which the warm air passes from these openings makes it possible to heat the side of the mill farthest from the flues, since the smooth ceilings (the beams being in the direction of the air-current) do not in any way interfere, while the swiftly revolving shafting and pulleys break up the air-currents just enough to distribute the air thoroughly throughout the room.

VENTILATION

46. The ventilating of the mill is most satisfactorily performed by the fan-and-heater system of both heating and ventilating that has just been described, but when the direct system of heating is adopted ventilation must depend on the opening of windows, and consequently there is practically no ventilation in the winter time. At other times of the year the windows can be opened, and for this purpose the windows of such mills should be constructed with transoms swinging on central pivots and with suitable attachments to open them to various distances and lock them in position.

The problem of ventilating the upper rooms of a mill in the summer time where the monitor-roof construction is used is comparatively simple, as hot air naturally rises and flows out of the monitor windows, fresh air finding an entrance through the windows on the sides of the room.

Many mills are now adopting the *fan system* of ventilating, entirely independent of the heating system. In such cases, cool, fresh air is taken from the basement of the building or some point in the mill yard shaded from the direct rays of the sun, and by means of a fan, forced through large galvanized pipes into each room of the mill, the hot and foul air passing out through the windows. In order to make such a system work successfully, it is necessary to study the prevailing winds through the summer time and arrange the supply and exit of air so that these will aid rather than hinder the system.

Digitized by Google

A plentiful supply of fresh air is beneficial in a mill at any time of the year, tending to produce more and better work on the part of the operatives. In the summer time it is an absolute necessity to have some form of ventilation to reduce the temperature of the rooms.

LIGHTING

WINDOWS

47. The **lighting** of a mill constructed on modern principles is not at all a difficult problem in the daytime, as mills now have large window space, larger in many cases than the amount of wall space. The windows are run up almost to the ceiling so that the rays of light may be admitted as high as possible and thus reach the center of the room, and in such mills the machinery in the middle of the room is almost as well lighted as that at the side. In old mills the problem is more difficult, since in many of these the windows are small and the panes of glass in each sash are also small. In such cases it is often advisable to replace old windows with new ones having large panes of glass.

The placing of machinery in such mills is also of importance; machines with large creels should be placed across the room, rather than lengthwise, so that the light is not obstructed by the creel. In many cases the use of prism glass is of advantage in diffusing the light so that it reaches all parts of the room.

ARTIFICIAL LIGHTING

OIL AND GAS

48. **Artificial lighting** is either by *oil lamps*, *gaslight*, or *electric light*. **Oil lamps** are used only in antiquated or remote country mills, are not approved by fire-insurance companies, and should be replaced by electric lights whenever possible.

Digitized by Google

Gas lighting is still largely used, although being rapidly supplanted by electric lighting. Many mills have their own gas plant, and with mills already piped for gas it is often not desirable to incur the expense of installing an electric-lighting system. The same is also true of smaller mills where an electric-lighting system would not be economical and where gas can be obtained from a city supply. The disadvantages of gas lighting are principally on account of the risk of fire, since it is necessary to carry around a lighted lamp or to adopt some other equally dangerous method in order to light the gas; the gathering of fly around the gas piping, which may become ignited by a puff of air bringing it in contact with the gas jet, also adds to the possibilities of fires. These dangers can be minimized by the use of electric lighters for lighting the gas and by a proper system of brushing down the gas pipes daily.

ELECTRIC LIGHTING

49. Electric lighting in textile mills is undoubtedly the best system, being the most convenient and, for a large plant, if properly installed, the most economical method of lighting. It is also the only practicable method in mills, especially in the South.

Electric lighting and the explanation of the necessary machinery and principles of the same cannot here be described in detail, but it may be said by way of a definition that while a current of electricity may be produced in various ways for lighting purposes, it is almost exclusively generated by the application of the power of a steam engine or waterwheel to the driving of a dynamo. The electric current thus produced is transmitted by wires to lamps which are of two kinds—the *incandescent* and the *arc*.

50. In **incandescent lighting,** the light is produced by passing the electric current through a fine filament of carbonized vegetable fiber enclosed in a glass bulb from which the air has been exhausted. The lighting capacity of incandescent lamps is usually only small, generally about

Digitized by Google

16 candlepower, so that a mill lighted on the incandescent system has to be equipped with a large number of small lamps. These lamps are distributed throughout the mill and are often used in connection with a lamp shade placed above, the best form of which is of tin, painted white underneath and green on top; these deflect the light where it is most desired and are preferable to porcelain shades, because the latter are so easily broken.

51. In **arc lamps,** the light is produced by passing an electric current across a small space that separates two pieces of carbon. This produces an intense light, generally about 1,000 candlepower, resulting in the burning away of the carbons at a slow rate. These lamps are usually placed near the ceiling of the room and are provided with large reflectors, each lamp lighting a considerable area of floor space. This system of lighting, if properly installed, is very effective for some purposes, but one of the disadvantages is the casting of shadows and the consequent leaving of dark spaces under and around machines, through the light not being so well diffused as is the case with incandescent lighting. Attempts have been made to overcome this, successfully in some cases, by using what is known as the *inverted arc lamp.* In this case the ceiling is painted white, so as to form a good reflecting surface, and thus the light, which is directed from the arc lamp to the ceiling of the room, is reflected and gives a well diffused illumination throughout the room.

52. Dynamos.—For either of these systems of lighting, in case the mill corporation manufactures its own light, it is necessary to install one or more **dynamos.** In case only one dynamo is used it may be driven by a belt from an engine separate from that which drives the shafting of the mill, or may be directly connected; that is, its revolving parts placed on the main shaft of the separate engine. Either of these plans is a convenient method of installing the plant, as light can thus be produced at any time, whether the main engine of the mill is in operation or not; but it is

Digitized by Google

not so economical as to drive the dynamos from the main engine, since the power necessary can be produced so much more cheaply in a large engine.

Generally speaking, the dynamo, or *generator* as it is sometimes called, is a belt-driven machine located near the engine (in small mills often in the engine room), belted from a countershaft driven directly from the engine. By means of a friction clutch or tight and loose pulleys the machine can be operated when desired. The dynamo is mounted on an iron frame, along which it can be moved so as to tighten the belt that drives it. It generally produces an electric current of about 125 volts, and is ordinarily a compound-wound, multipolar, generator, although machines are now used of many other types and producing currents of different voltage.

Insurance companies require that dynamos be located in a dry place and insulated by being placed on non-conducting material, such as a wooden floor or base frame; they are not allowed to be placed in a room where any hazardous process is carried on or where they would be exposed to inflammable gases or the flying of combustible material, and are to be covered with a waterproof fabric when not in use.

53. Switchboard.—The wires from the generator are conducted to the **switchboard,** usually of slate or marble, which is not placed too near the floor, the ceiling, or the wall of the room, is readily accessible from all sides, and is kept free from moisture. On this switchboard a hand regulator, or *rheostat*, is usually placed. The voltmeter is also attached, indicating to the attendant the voltage of the current that is being produced. In addition to this the switchboard is provided with what is called a *pilot light*, which is so wired that it cannot be shut off by any of the switches lighting up the various parts of the mill; thus the operator always has a light to work by as long as the machine is in operation, and can see at once whether any current is being produced.

The switchboard always contains, as its name indicates, a number of switches, generally of the type known as the

Digitized by Google

double-pole jaw type, for all the main circuits of the mill, usually one for each room with a separate one for all passage-ways and entrances; thus the lighting of the whole mill is controlled from the dynamo room and can be switched on or off from there, either the whole at once or each room separately.

54. Wiring.—From these switches separate wires are conducted to the different rooms of the mill that are required to be on a separate circuit, the wires differing in size according to the number of lamps that they carry and the distance that the current is conveyed. One or more main supply wires run the length of the room, branches being taken off at intervals to supply several lamps in each bay of the mill. The size of the wire gradually diminishes, but the fire-insurance companies do not allow a smaller wire than what is known as number 14 B. & S. gauge, or a wire .06408 inch in diameter, to be used. The lamps are hung, from a rosette attached to the ceiling, by drop cords regulated to the height desired.

In wiring a mill for electric lighting, it is of importance to use wire sufficiently large to carry an electric current of the required strength for all the lamps that are likely to be supplied from it. The wires should also be well insulated; not only should they be covered with an insulated covering, but when they pass through walls or timbers, a porcelain or other tube should intervene between the wire and the structure. At one or more points on each circuit a *fuse* should be placed; this is a contrivance by which the current of electricity is passed through fusible metal, which will only allow a current of a certain strength to be conveyed. Should a current of a higher potential, and therefore of greater strength, be accidentally turned on to this circuit, the fusible metal will melt, thus breaking the circuit and saving the wiring and lamps from being burned out.

The number of lamps necessary for the different machines will depend of course on the size of the machines and on the importance of closely watching the work that they do.

Digitized by Google

Some machines can be dimly lighted without seriously affecting the running of the work, while others require the best of light.

Occasionally a mill engineer has to plan on lighting buildings separated from the main mill, or lighting the mill yard. In this case specially insulated weather-proof wire must be used, and it is also advisable to provide lightning arresters.

FIRE-PREVENTION AND PROTECTION

FIRE-PREVENTION

55. It is very important that a mill should be so constructed as to minimize the risk of fire, and so equipped that a fire may be extinguished at the earliest possible moment. At the present time the prevention of fire in textile mills has been reduced to a science, and the number of serious fires in mills is only a small percentage of the number that formerly occurred. Often the chief object in adopting means of fire-protection and prevention is merely to secure the lowest possible rate of insurance, which in itself is very desirable, as it permanently reduces the expense of conducting the business of the mill; but the construction of a mill so that there is the least possible risk of damage by fire also prevents serious loss of business and trade connections that would occur should the mill be destroyed by fire, even though the amount of insurance be sufficient to rebuild the structure, and it is also the means of preventing the risk of loss of life.

It is now customary among all mill engineers to submit the plans of a mill to the mutual insurance associations before commencing to build the structure; and these associations decide whether those departments in which there is the greatest risk of fire are sufficiently well separated from other parts of the mill by fire-walls, and also whether each room of the mill and each floor of the mill is sufficiently isolated from the others, by avoiding any unnecessary openings in

Digitized by Google

the floors or other means by which fire may pass from one room to another.

Fire-doors are called for, and in some cases the windows must be protected by fire-shutters, if they are close to other buildings. These provisions are all made either to prevent the occurrence of fire or to reduce the risk of fire spreading when it does occur, but another important feature of fire-protection is the providing of means by which fire can be extinguished promptly.

OUTSIDE FIRE-PROTECTION

56. Fire-protection may be divided into *inside* and *outside protection*, the former being accomplished chiefly by means of an adequate sprinkler system, while the latter necessitates an equipment of hydrants and hose piping. The establishment of two or more independent sources of water supply that may be utilized for either the inside or the outside fire-protection systems is also necessary. No mutual companies accept risks with one source of supply. Some mills, however, have only high and low public water systems, but these are few and are not insured in the best companies. Two city systems are also considered as two sources of supply. The great majority of mills in large towns are supplied by tank, public water, and pump. In others either of the first two is omitted. The companies insist that the water supplies must be independent of each other, so that if one fails utterly the other can fully meet the demands.

57. Hydrants and Hose.—The hydrants of the outside fire-protection system are connected to a line of cast-iron pipe, usually entirely surrounding the mill premises. These hydrants, which carry one, two, or three branches to which hose pipes may be attached, must be sufficiently far from the mill so that they will not be put out of commission in case of a wall falling outwards during a fire, and not too far away so as to require an unnecessary length of hose pipe to reach the mill. The usual distance is about 50 feet from the mill wall. As a rule, hydrants are located about 200 or 300 feet

Digitized by Google

apart, but their exact position depends entirely on the nature of the property. The general statement may be made that hydrants are so placed that a stream may be directed into any window or to any roof without using excessive lengths of hose. The tendency is toward more hydrants and less hose, as hydrants are cheaper and short lines of hose more desirable. In large properties, roof hydrants are used; this gives a vantage point from which to fight a fire.

Hose houses should be provided, containing about 250 feet of hose attached to the hydrant, and also axes, spanners, lanterns, nozzles, etc. Rubber-lined hose must not be kept in the mill, since the heat causes excessive deterioration, and in case of fire the hose should be readily reached. Only such hose should be purchased as is made by leading manufacturers under the specifications of the mutual insurance companies, and especially designed for mill use. Cheap hose is not economical in case of fire.

58. Underwriters' Pump.—The outside fire-protection system is supplied with water by means of a fire-pump known as the **Underwriters' pump** which is designed especially for fire-protection. It is of the type known as *duplex* and is built especially strong and designed so that it will start easily even after a period of inactivity. Its steam and water passages are made larger than in trade pumps, so that it may run at high speeds without causing water hammer. It is rust-proof, so that it may start instantly after disuse, by making its piston and valve rods of Tobin bronze and its water pistons, stuffingboxes, and bearings of brass. No cast iron is used in its valve gear, steel or forgings being substituted; this prevents breakage through carelessness, which often accompanies the excitement during a fire. It has a large number of valves and many extra attachments, such as a vacuum chamber, pressure gauges, safety valve, priming pipes, hose valves, etc., not found on ordinary pumps. Underwriters' steam pumps are built in the sizes given in Table I.

Digitized by Google

TABLE I

Dimensions Inches			Capacity	
Dia. of Cylinder	Dia. of Plunger	Stroke	Gallons per Minute	Fire-Streams
14	× 7	× 12	500	2
16	× 9	× 12	750	3
18	× 10	× 12	1,000	4
20	× 12	× 16	1,500	6

Some makers use a 10-inch stroke in place of the 12-inch, which necessitates larger cylinders and plungers. The 1,000-gallon pump is in most general use. It requires about a 150-horsepower boiler and at least 45 pounds of steam at the pump; 70 revolutions per minute is a usual speed, but in case of necessity higher speed can be reached.

The following table gives the pipe sizes for Underwriters' pumps:

TABLE II

Capacity Gallons	Suction Inches	Discharge Inches	Steam Supply Inches
500	8	6	3
750	10	7	$3\frac{1}{2}$
1,000	12	8	4
1,500	14	10	5

A priming tank of 300 gallons capacity is placed over the pump and connected with the priming pipe, so as to enable the pump to quickly catch its suction. A fire-pump must be connected to the hydrant system by means of an indicator gate valve of the type subsequently to be described. A check-valve is always placed on the discharge, so that the pressure in the system will not enter the pump and cut the rubber valves by forcing them into their seats.

Digitized by Google

59. If no pond or river is available the insurance requirements call for a reservoir of not less than 50,000 gallons capacity from which the pump may be supplied with water; the suction pipe must be carried into a well at the bottom of this tank, so that the reservoir may be entirely emptied, and a rose, or suction, screen be placed at the foot of the suction pipe to prevent the pumps being clogged. The whole area of this screen should be at least five times the area of the suction pipe, and even more if possible.

INSIDE FIRE-PROTECTION

SPRINKLER SYSTEMS

60. An approved sprinkler installation is an absolute necessity to the modern mill or, for that matter, to older mills. A **sprinkler system** consists ordinarily of two sources of water supply, one of which is generally a supply tank placed at least 15 feet higher than the highest sprinkler in the mill and holding not less than 10,000 gallons of water. From this tank a pipe, at least 6 inches in diameter, runs to the sprinkler system. This supply pipe runs vertically to the basement of the mill and then horizontally to the vertical pipes, called *risers*, that supply each section of the sprinkler system throughout the building with water. It is preferred by the insurance companies for this supply pipe, if possible, to run outside the mill and reenter to the supply risers. A still better arrangement is for the tank itself and all connections to be outside the mill, either on a trestle in the mill yard or on a slope of a hill adjacent to the mill, if such be available. By this means the water supply for the sprinklers is not affected, no matter how serious the fire.

A check-valve should be placed on all tank discharges to prevent the tank filling from other supplies and overflowing. A gate valve, of the indicator pattern, is also placed in the pipe and sealed open. If the valve is outside in the ground an indicator post is placed on it, thus allowing it to be found in deep snow and to be operated easily. This applies to all outside valves.

Digitized by Google

Fire-pumps are so connected as to supply the sprinklers as well as the hydrants, and the supply tank is only used to operate the sprinklers until the pump is started. When the pump is started, this raises the pressure in the system until the pressure exceeds that given by gravity from the tank. Then, of course, the check-valve under the tank will close, shutting out the tank and at the same time preventing waste from the pump through it.

Insurance requirements call for the sprinkler system to be complete and isolated in all sections of the mill divided by fire-walls; that is, if the picker room is separated by fire-walls from the remainder of the mill, the picker room and all rooms within that part of the building separated by a fire-wall from the remainder of the mill must have a separate riser to supply the sprinklers in that section with water—they must not be fed through fire-walls from some other rooms. The object of this is that, if one portion of the mill is destroyed, the sprinkler system may be complete and intact in other parts of the mill, and water may be shut off from any open or broken pipe caused by fire without depriving other rooms of protection.

The risers run vertically from the main supply pipe to the roof of the mill, passing through each floor and supplying the sprinklers in each story with water. Insurance requirements call for this riser to be of sufficient size to supply all the sprinkler heads on any floor in each section. Formerly it was the custom to have a valve in each room to shut off the water from that room, but for a number of years the requirements have called for only one valve to control all the piping in each section of the building supplied from one riser. This valve should be placed outside and, if possible, 20 or 30 feet away from the building. Valves inside the building cannot always be reached in case of fire, add to the expense of installation, and require more care in seeing that they are kept open; the supply of water also can be better controlled from the outside.

In describing fire-protection, the statements that are made refer to general practice, as of course special conditions,

Digitized by Google

such as isolated rooms, dust rooms, storage rooms, and others, are protected differently and form exceptions to the general rules.

The water is distributed by a feedpipe taken from the riser by means of a **T** on each floor; branch lines are taken from this feedpipe and the sprinkler heads attached at intervals on these branches. In narrow- and medium-width mills this feedpipe is carried alongside the windows, but as only six heads are allowed on one branch pipe, a different arrangement must be adopted in very wide mills, by running a feedpipe down the center of the room and taking branches from each side. Branches are run along the middle of each bay in all cases. All branches and feeders must be so hung that when the water supply is shut off and pressure removed, all water will flow backwards, toward the riser, to a suitable drip valve, which is kept closed and sealed. Thus, when water is shut off, the pipes may be drained to enable repairs to be made without water entering the room.

61. Sprinkler Heads.—A sprinkler, often called a *sprinkler head* or, briefly, a *head*, is an appliance that can be attached to a pipe, and really consists of a small valve held to its seat by a soldered lever. This solder is prepared so that it will melt when it reaches a temperature of 155° F., or in special cases, for boiler-house work and in other hot rooms, so that it will melt at from 265° to 280°. When the solder melts, the valve is forced from its seat and a supply of water under pressure passes through the sprinkler against a brass disk so constructed as to deflect the water, distributing it in a spray about 10 feet in every direction. This spray is not effective, from the fire-protection point of view, over the circular area of 20 feet diameter, as the preceding statement would imply, since the outer edge of the circle would only receive a few scattering drops. It is customary to assume that the sprinkler is not effective outside of a circular area of 15 feet diameter. Very often the rule of allowing 80 to 90 square feet of floor space per head is

Digitized by Google

adopted. It will be seen that each sprinkler only protects a comparatively small amount of floor space and that sprinklers must be installed at intervals throughout the mill and also in such a manner that the water may spread as widely as possible; for instance, a sprinkler should be placed in the middle of the bay rather than close to the floor timbers, which would prevent the water spreading in one direction. All concealed spaces or pockets that cannot be reached by the water from sprinklers placed in the middle of the bay must have additional sprinklers provided. This applies to supply closets, passageways, belt ways, and similar places.

The insurance requirements for mills constructed with 12-foot bays, measuring from center to center of the tim-

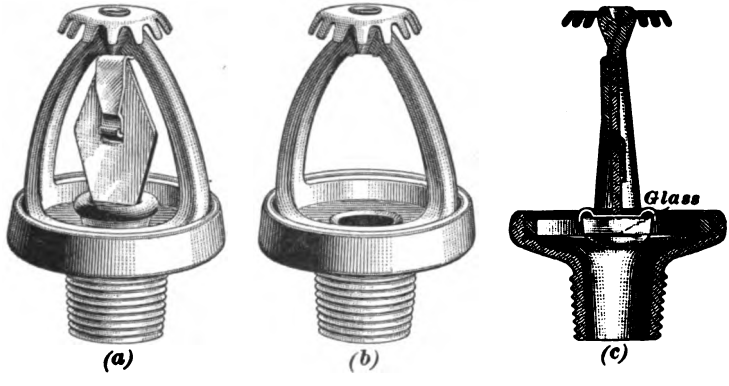

FIG. 48

bers, are that the distance between the sprinklers of each branch shall not exceed 7 to 8 feet; in mills with 11-foot bays, that the sprinklers shall not be more than 8 or 9 feet apart; and in mills with bays varying from 6 to 10 feet, that the sprinklers shall not be more than 10 feet apart. This applies to the regular mill construction of building, with smooth, solid plank and timber construction; it is also stipulated that sprinklers shall be placed in the center of each bay.

62. Grinnell Sprinkler.—A closed **Grinnell sprinkler,** showing the glass valve, or button, held down on its seat in a flexible diaphragm by a strut, or lever, is illustrated in

Digitized by Google

Fig. 48 (*a*). When this lever gives away, owing to the heat of the fire, which melts the fusible metal, the glass valve is thrown out by the spring of the flexible diaphragm, aided, of course, by the pressure of the water in the feedpipe. When this happens the sprinkler is opened, as shown in Fig. 48 (*b*), and a solid ½-inch stream of water is thrown against the brass disk and thus distributed in a spray, as previously explained. Fig. 48 (*c*) shows a section of this sprinkler and illustrates the method of seating the valve on the flexible diaphragm. Most other makes of sprinklers have the valve resting on the seat, which is a part of the main casting, and the buttons on all heads depend more or less on the water pressure to throw them off.

TABLE III

Size of Pipe Inches	Number of Heads Allowed
¾	1
1	2
1¼	3
1½	5
2	10
2½	20
3	36
3½	55
4	80
4½	110
5	140
6	200

63. In all fire-protection work, inside and outside, it is of the utmost importance to have piping sufficiently large to carry any volume of water that is ever likely to be required, and also to avoid sharp angles in piping as much as possible. It is found in practice that if water is throttled by being forced through too small a pipe at any point, the supply of water is insufficient, especially when many sprinklers or hydrants are in operation at the same time; and the same thing occurs if water must pass around a right angle in the pipe. Bends with long turns should be placed at all angles, especially of the supply pipes and feedpipes; for this reason the insurance companies limit the number of sprinklers that may be placed on each branch pipe. Table III shows the size of the pipe and the maximum number of sprinklers that may be supplied by it.

Digitized by Google

It is, of course, always understood that any feeder or supply pipe at any point shall not be smaller than the pipe that it feeds.

From the description that has just been given, it will be seen that there is a direct connection between the sprinkler tank at the top of the mill and each sprinkler within the mill, as it is possible for water to pass from the tank, down the main supply pipe to the outside of the building, along the supply pipe placed under ground, and thence to each riser, feeder, and branch pipe.

64. All visible fire-pipe valves are now of the outside screw-and-yoke, or rising-stem, pattern; no other type is accepted by the mutual insurance companies. This is a reliable type of valve and always shows the position of the gate in the pipe. Outside valves are always required to be of the type known as the indicator gate valve, which shows, by means of plates containing the words *open* and *shut*, whether the valve is open or closed; these valves are only placed for the purpose of shutting off the water of any system in case of making repairs or after a fire has been extinguished, and are not to be closed at any other time. It is of the utmost importance that valves placed on the main supply pipe or the riser should be kept open and sealed. This is done by having them strapped open with a riveted strap.

65. Many minor requirements are made by the insurance companies with regard to the details of the installation of fire-protection systems that are outside the province of this description. Sufficient has been said, however, to show that if the requirements of the insurance associations are followed, almost every inch of space in the mill, inside or outside, can be deluged with water, and thus the possibility of fires spreading in textile mills is very remote.

It is of the utmost importance, of course, that all these appliances be kept in working order and periodically tested; also, that a certain number of employes of the mill be detailed as a fire-department, each knowing his own station,

Digitized by Google

and that they practice periodically in operating the outside fire-protection system.

Some of the miscellaneous points in connection with fire-protection and other matters on which the insurance companies make certain requirements are the following: Fire-pails must be placed at frequent intervals throughout the mills and kept filled with water, so as to be available for use to check a blaze when it first starts and before the temperature rises sufficiently to put the sprinklers in operation; all electric wiring and installations for the production or the use of electricity must be approved by the insurance company; elevator wells must be closed with automatic hatches; stand pipes and hose must be provided at intervals throughout the inside of the mill.

PLUMBING AND WATER SUPPLY

66. Plumbing.—The plumbing of the mill is a comparatively small matter and the expense is very moderate in comparison with most of the other items of equipment. Most cities have rules and regulations that govern the plumbing of all large buildings, such as factories, and as these are usually thoroughly efficient, they should be followed as closely as possible.

In mills it is customary to provide lavatories on each floor, usually situated in a tower. Especial care should be taken to provide sanitary conditions and to adequately provide for the flushing of all bowls, closets, etc. Suitable sinks and an ample supply of water for washing purposes should also be provided. Pains should also be taken that the pipes, traps, etc. form a perfect system of drainage, in order that no stagnant matter may be collected to endanger the health of the operatives.

67. Water Supply.—A satisfactory and sufficient supply of water to any textile mill is of great importance. Water is required for the following purposes as well as for fire-protection: (1) To supply boilers; (2) for water closets; (3)

Digitized by Google

for size mixing and use around the slashers; (4) in woolen and worsted mills, for the scouring and finishing departments; (5) in all mills, for the sinks, for drinking water, etc.; (6) in mills that have dyeing, bleaching, or finishing plants attached, an adequate supply of good water is of paramount importance.

Regarding the supply of water to a mill, the problem is simplified when it can be taken from city mains. Where the mill is to provide its own source of water supply it must usually be pumped from a spring, creek, or river; if this source is near the mill, the simplest method is to install a steam pump near the water supply and carry a steam supply pipe to it. If the source of supply is at some considerable distance, the best plan is to install an electric pump near the water and a generator in the mill. The electric current from this generator can be transmitted by wire to the pump and thus the necessary supply of water obtained.

Digitized by Google

Digitized by Google

MILL ENGINEERING

(PART 3)

COTTON-MILL PLANNING

INTRODUCTION

1. Perhaps no portion of an expert cotton-mill engineer's work is of more importance than that of planning the layout of the machinery. This is not a matter to be attempted by inexperienced persons, but is a task in which the services of an expert are of the utmost value. The construction of mill structures and the installation of the machinery constitute the principal duties of the textile-mill engineer, a profession that is followed by many able men in different parts of the country. For a mill official to attempt to perform this work, especially at the commencement of a new enterprise, is very unwise, and the few hundred dollars of expert's fees that would be saved would probably be expended over and over again before the mill was in operation, in expensive construction, waste space, the provision of an excessive number of machines, or unsuitable machinery, in addition to the subsequent and constant unnecessary expense of operating the plant. It is, of course, unnecessary to engage the services of an outside expert if some official of the mill is a competent and trained mill engineer, or if the construction to be attempted is merely an extension of an existing plant where former plans can be followed, or where previous work is to

For notice of copyright, see page immediately following the title page

Digitized by Google

be duplicated. In many cases a knowledge of the method of planning the machinery of a mill is of value to a superintendent in rearranging the machinery in various rooms, in which cases the services of a mill engineer are not requisite.

PRELIMINARY CONSIDERATIONS

2. In order to explain the method of planning the layout of a mill, a standard cotton mill will be taken as an illustration, and the details of the machinery equipment worked out with reference to this particular type of mill. There are several important matters that should be carefully considered at the outset in connection with planning a cotton mill; some of these are the following: (1) The type of mill, whether a yarn mill or cloth mill; (2) the class of goods to be made; (3) the size of the mill, as determined by the number of spindles; (4) the machines necessary to be operated in connection with this number of spindles in order to produce the goods desired; (5) the space that this machinery will occupy; (6) the extra expense to be incurred in addition to the building and equipment of the mill—the land to be purchased, tenement houses to be erected, capital to be left available for the operation of the mill, etc.; (7) the total cost of the undertaking.

When these matters are decided it may be found that financial considerations will greatly affect the original plans and cause the revision of the entire scheme. It is important, therefore, to plan each of the above-named subjects and have specifications for them submitted to and approved by the proprietors or directors before commencing to plan the building. In fact, a preliminary consideration of these leading points and their relation to one another is one of the most important duties of a mill engineer.

3. Type of Mill.—There are several types of cotton mills, and it may be decided to construct either a yarn mill, for the production of cotton yarns only, the product to be disposed of to the trade; or a cloth mill, for the production

Digitized by Google

of woven fabrics. If a yarn mill is decided on, it may be intended to produce carded yarns only, combed yarns only, or both carded and combed yarns. It may be a yarn mill producing only frame-spun yarns or mule-spun yarns, or a warp-yarn mill, a hosiery-yarn mill, or a combination of any or all of these. In any case the character of the product desired will have a material influence on the equipment necessary for the successful and economical operation of the plant. If the mill is to be a cloth mill it will probably be a yarn mill also, as the majority of cloth mills produce their own yarns. It may or may not be intended to bleach, dye, or finish the woven products, but if it is, bleaching, dyeing, or finishing works must be included in the mill plans.

4. Class of Goods.—Assuming that a cloth mill has been decided on, the class of goods to be manufactured is the next most important consideration, as a mill equipped with machinery for making coarse goods is unsuitable for the manufacture of fine fabrics; that is, without very extensive changes. It is not out of place here to refer to a few of the leading makes of cotton cloth, the preparation for the manufacture of which comes within the duties of the mill engineer.

Coarse goods, such as are now generally manufactured in the South and in some of the older mills in the New England and Middle States, include principally what are known as *sheetings*, *drills*, *osnaburgs*, and similar fabrics. **Sheetings** are usually from 2.85 to 4 yards to the pound, 30 to 36 inches in width, and made from yarns ranging from 12s to 24s. **Drills** are usually about 2.85 or 3 yards to the pound, 30 inches in width, and made from 12s to 15s yarn. **Osnaburgs** are the same width as drills but are made from much coarser yarns and average about 2 yards to the pound.

Another class is **medium-weight goods,** the best known variety of which is **print cloth,** about 28 inches in width, weighing 7 yards to the pound, and made from 28s warp and 36s filling yarns. In this class is also a wide variety of

Digitized by Google

shirtings and irregular print cloths, varying from 4 to 8 yards to the pound and from 28 inches upwards in width, while the numbers of the yarns range from 28s to 40s. Many mills are engaged on fabrics of this character.

Still another classification is that of **fine goods,** made in all weights from 8 to 20 yards to the pound and higher, with various weaves, and from various numbers of yarns up to 100s, and even finer.

In order to have a standard to work on, it will be assumed that it is required to lay out the machinery for a mill to make 4-yard goods, 39 inches wide, 28s warp and 36s filling, 72 sley, and 80 picks to the inch.

5. Size of Mill.—The size of the mill is the next consideration. Cotton mills are usually spoken of by the number of spindles, and in this case it will be assumed that 10,000 spindles have been decided on as the size of the mill. It will also be assumed that the capital to be invested amounts to $180,000, of which $20,000 is to be used for the purchase of the land and the erection of tenement houses for the operatives, and $20,000 to be reserved for working capital. It will also be understood that the mill will be operated by steam power and that there are no unusual difficulties in connection with the engineering of the work because of an unsuitable location.

ORGANIZATION

6. There now remain three important matters to be figured out: (1) The *organization* of the mill in order to produce the line of goods; (2) the machinery needed to supply 10,000 spindles and to take care of the product of these spindles and manufacture it into cloth; (3) the space that is to be provided in the mill building to accommodate this machinery. The first of these, namely, the organization of the mill, must be determined before the others can be decided on.

In mill engineering, the term **organization** is usually applied to the program, or list, of the weights of the product

Digitized by Google

at each machine and the drafts and doublings necessary to produce these results, the whole organization being calculated closely enough so that, after making due allowances for waste, it will show the weight, hank, or number delivered, from the weight of lap in the picker room to the weight of the cloth desired. To figure out such an organization, it is necessary to have a knowledge of the processes of manufacture through which the raw cotton must pass. A suitable style of organization to make the numbers of yarn desired, namely, 28s and 36s, and the weight of goods required is as follows.

The counts of the warp yarn to be made is already known as 28s and that of the filling as 36s; and for making these yarns, a mill usually has the following processes: Bale breaker, automatic feeder and opener, breaker picker, intermediate picker, finisher picker, one process of carding, three processes of drawing, no combing, and three processes of fly frames (slubber, intermediate, and roving). Then follow spinning, spooling, warping, slashing, drawing in, weaving, sewing, cloth brushing, folding, and baling.

7. For the counts of yarn to be spun, the lap from the finisher picker should weigh from 12 to 14 ounces per yard; in this case a 13-ounce lap will be taken for the purpose of illustration. The number of processes between the lap and the yarn being known, the hank of the 13-ounce lap must be ascertained and the attenuation between the lap and the yarn so distributed that the yarn will gradually be drawn finer at each process with the least detriment to the fiber and with a maximum of production. Before this can be decided, however, the number of doublings to be made at each process must be known. It is usually understood that at the drawing frames in a mill spinning yarns of medium counts there are 6 doublings at each process, with the draft approximately the same. It is also a general custom to have no doubling at the slubbing frames but to have 2 ends up at the intermediate frames, 2 ends at the roving frames, and generally 2 ends at the spinning frames; that is, yarns of these

Digitized by Google

counts are usually spun from double roving. There is, of course, no doubling in a card, and the card draft is generally about 100.

Table I gives the hank of laps commencing with a 12-ounce lap and ending with a 16-ounce lap.

TABLE I

HANK OF LAPS

Weight of Lap per Yard Ounces	Hank	Weight of Lap per Yard Grains
12	.00158	5,250
12½	.00152	5,468¾
13	.00146	5,687½
13½	.00141	5,906¼
14	.00136	6,125
14½	.00131	6,343¾
15	.00126	6,562½
15½	.00122	6,781¼
16	.00119	7,000

The hank of different card slivers is given in Table II.

TABLE II

HANK OF CARD SLIVERS

Grains per Yard	Hank
50	.1666
55	.1515
60	.1388
65	.1282
70	.1190

The 13-ounce lap is therefore .00146 hank, and is equal to 13×437.5 (grains in 1 ounce) $= 5{,}687\frac{1}{2}$, grains to the yard. This, when operated on by a 100 draft at the card gives, mathematically, a 56.87-grain sliver, but as there is at least 3 per cent. of waste at the card, the actual weight of the sliver delivered will not exceed 55 grains. This sliver, after passing through the drawing frames with a doubling of 6 at each delivery and the customary draft of 6, will still remain a 55-grain sliver, or .151-hank, since if the doublings equal the draft the weight of the sliver will remain unchanged.

Digitized by Google

8. The next question to be considered is the series of drafts between the sliver delivered at the third drawing frame and the yarn. At the slubber there is only 1 end up, but at the intermediate frame there are 2 doublings, also 2 at the roving frame and 2 at the spinning frame. An arrangement of drafts for the four processes following the third drawing process must therefore be found that will reduce the .151-hank sliver delivered by the third drawing frame to a 36s yarn with the above doublings. A somewhat elastic rule used by mill engineers is to have the drafts in the processes between the third drawing frame and the spinning frame about 4, 5, 6, and 12, respectively, increasing or decreasing each factor slightly, as may be necessary, to obtain the exact total draft required to produce yarn of the required counts; that is, the draft of the slubber should be 4, or thereabouts; of the intermediate and roving frames, approximately 5 and 6, respectively; and of the spinning frame, about 12. In accordance with this rule, drafts of 4.5 in the slubber, 5.5 in the intermediate frame, 6.5 in the roving frame, and 12 in the spinning frame may be selected as practical drafts, which, as shown by the following explanation, will give the desired attenuation of the roving necessary to produce a 36s yarn from the spinning frame.

Adopting these drafts and ignoring the question of waste at each process, as the amount of waste is slight, the hank of the slubbing will be .68, which is determined by multiplying .151 by 4.5 (the draft), which equals .679, or practically .68. The intermediate frame will deliver a 1.87-hank roving, which is determined by multiplying .68-hank slubbing by 5.5 and dividing the result thus obtained by 2 (the number of doublings). The hank of the roving from which the yarn is spun will be 6, determined by multiplying 1.87-hank roving from the intermediate frame by 6.5 and dividing the result thus obtained by 2, which equals 6.077-, or in round numbers 6-hank. The counts of the yarn will be 36s, determined by multiplying 6-hank roving by 12 and dividing the result thus obtained by 2.

Digitized by Google

9. The above arrangement provides for the production of the filling yarn, but the warp yarn, which is to be 28s counts, can be made from the same hank roving as the filling yarn by reducing the draft in the spinning frame; although a more satisfactory yarn could be made from slightly coarser roving, for convenience in the mill the same hank roving is often used. In this case the draft at the warp spinning frames will be 9.3, determined by multiplying the number of the yarn by the number of doublings and dividing by the hank roving, as follows: $\frac{28 \times 2}{6} = 9.3$, draft.

10. Summary.—The complete organization is shown in the following summary: Finisher picker, 13-ounce lap, .00146 hank; cards, draft 100, 3 per cent. loss in waste, 55-grain sliver, or .151 hank; first drawing frame, draft 6, doublings 6, hank .151; second drawing frame, draft 6, doublings 6, hank .151; third drawing frame, draft 6, doublings 6, hank .151; slubbers, draft 4.5, no doublings, hank .68; intermediate fly frames, draft 5.5, doublings 2, hank 1.87; roving frames, draft 6.5, doublings 2, hank 6.07; warp spinning frames, draft 9.3, doublings 2, counts 28s; filling spinning frames, draft 12, doublings 2, counts 36s.

MACHINERY EQUIPMENT

11. Calculation of Cotton Consumed.—The mill engineer is now in a position to determine the number of machines necessary for each process, an item that depends on the productive capacity of each machine and the amount of stock to be manipulated. The weight of the product per spindle at each process is determined largely by the hank of the sliver or roving, or the counts of the yarn, which is the reason for the necessity of working out the organization of the mill as a preliminary to estimating the amount of machinery required.

In order to figure on the number of preparatory machines necessary, the number of spindles to be supplied must be

Digitized by Google

known, in this case 10,000. The production of a warp spinning frame on 28s yarn is slightly in excess of that of a filling frame on 36s, but as the goods to be produced contain a

TABLE III

PRODUCTION OF WARP SPINNING FRAMES

Number of Yarn	Weight per Yard Grain	Twist per Inch	Revolutions' of Front Roll per Minute	Revolutions of Spindle per Minute	Hanks per Day per Spindle	Pound per Day per Spindle	Number of Yarn
10	.833	15.02	146.2	6,900	8.295	.829	10
12	.694	16.45	143.2	7,400	8.214	.685	12
14	.595	17.77	139.7	7,800	8.013	.572	14
16	.521	19.00	137.3	8,200	7.875	.492	16
18	.463	20.15	134.2	8,500	7.698	.428	18
20	.417	21.24	131.8	8,800	7.560	.378	20
22	.379	22.27	128.6	9,000	7.376	.335	22
24	.347	23.27	124.5	9,100	7.141	.298	24
26	.320	24.22	122.2	9,300	7.085	.272	26
28	.297	25.13	117.8	9,300	6.830	.244	28
30	.277	26.02	115.0	9,400	6.668	.223	30
32	.260	26.87	112.4	9,500	6.516	.205	32
34	.245	27.69	109.1	9,500	6.326	.186	34
36	.231	28.50	106.1	9,500	6.218	.173	36
38	.219	29.28	103.2	9,500	6.048	.159	38
40	.208	30.04	100.6	9,500	5.896	.147	40
42	.198	30.78	98.2	9,500	5.755	.137	42
44	.189	31.50	96.0	9,500	5.626	.128	44
46	.181	32.21	93.8	9,500	5.556	.121	46
48	.174	32.90	91.9	9,500	5.443	.113	48
50	.166	33.58	90.9	9,600	5.384	.108	50

slightly greater weight of warp than of filling yarn, it will be assumed that 5,000 spindles are to be operated on warp yarn and 5,000 on filling yarn.

Digitized by Google

Table III gives the production of warp spinning frames per spindle per day, making suitable allowances for all stoppages for doffing, oiling, cleaning, etc.; Table IV gives the

TABLE IV

PRODUCTION OF FILLING SPINNING FRAMES

Number of Yarn	Weight per Yard Grain	Twist per Inch	Revolutions of Front Roll per Minute	Revolutions of Spindle per Minute	Hanks per Day per Spindle	Pound per Day per Spindle	Number of Yarn
10	.833	10.27	161.2	5,200	8.945	.894	10
12	.694	11.26	158.2	5,600	8.778	.731	12
14	.595	12.16	156.9	6,000	8.706	.622	14
16	.521	13.00	155.4	6,350	8.719	.545	16
18	.463	13.79	152.2	6,600	8.540	.476	18
20	.417	14.53	148.8	6,800	8.444	.422	20
22	.379	15.24	146.1	7,000	8.290	.376	22
24	.347	15.92	139.9	7,000	7.938	.331	24
26	.320	16.57	138.2	7,200	7.927	.305	26
28	.297	17.20	134.1	7,250	7.692	.275	28
30	.277	17.80	129.6	7,250	7.514	.250	30
32	.260	18.38	126.3	7,300	7.323	.229	32
34	.245	18.95	122.4	7,300	7.097	.208	34
36	.231	19.50	119.1	7,300	6.980	.194	36
38	.219	20.03	117.6	7,400	6.892	.181	38
40	.208	20.55	115.4	7,450	6.835	.171	40
42	.198	21.06	113.3	7,500	6.711	.160	42
44	.189	21.56	110.7	7,500	6.557	.149	44
46	.181	22.04	108.3	7,500	6.414	.139	46
48	.174	22.52	105.9	7,500	6.272	.131	48
50	.166	22.98	103.9	7,500	6.218	.124	50

production of filling spinning frames. Referring to these tables, the production of a warp spinning frame on 28s yarn is .244 pound per spindle per day, which equals 1,220 pounds per day for 5,000 spindles. The production of a filling

Digitized by Google

spinning frame on 36s yarn is given as .194 pound per spindle per day, which equals 970 pounds per day for 5,000 spindles, making a total production of warp and filling yarn of 2,190 pounds per day. Considering a week to consist of 6 full days, for convenience in calculation, this will give a total weekly production of 13,140 pounds of yarn. Allowing for 5 per cent. of waste in the various machines between the finisher picker and the spinning frames gives a total of 13,831 pounds (13,140 ÷ .95 = 13,831.578) of cotton that must be passed through the finisher picker per week, and allowing 5 per cent. more for waste in the picking processes will necessitate 14,559 pounds (13,831 ÷ .95 = 14,558.947) being passed through the breaker picker per week.

PREPARATORY PROCESSES

12. Considering first the number of machines necessary in the preparatory processes, a bale breaker will handle 15,000 pounds of cotton per day of 10 hours, or 90,000 pounds per week; therefore, one bale breaker will be more than sufficient for a mill of this size. An automatic feeder and opener will handle 3,000 pounds per day of 10 hours, or 18,000 pounds per week; consequently, only one machine is necessary, since the mill is to consume only 14,559 pounds of cotton per week. A breaker picker will handle 500 pounds per hour, which, allowing for the time consumed in cleaning, etc., will give a total production of about 25,000 pounds per week, an amount more than sufficient to meet the needs of a 10,000-spindle mill; hence, one breaker picker is sufficient. Intermediate and finisher pickers produce about 12,500 pounds per week, allowing from 6 to 10 hours for cleaning. In this case about 14,500 pounds must be treated each week in the picker room and therefore one intermediate and one finisher picker will be barely sufficient, while two would be excessive; however, by reducing the time for cleaning to a minimum, one intermediate picker and one finisher picker will produce good work in sufficient quantity, and as these machines are somewhat expensive, it is better to economize here.

Digitized by Google

CARDING AND SPINNING

13. Cards.—The number of cards required to deal with 13,831 pounds of cotton per week must next be determined, and in this considerable latitude is left to the mill engineer. It is assumed that the revolving flat card will be used, the production of which varies in different mills, from 300 pounds for very fine yarns to 1,000 pounds per card per week for coarse yarns. In this case, 28s and 36s yarns are to be spun, and as 800 to 850 pounds per week is an appropriate production for such yarns, seventeen cards will be required to card 13,831 pounds of cotton per week.

14. Drawing Frames.—Dealing next with the drawing frames, the front roll of the machine is usually $1\frac{3}{8}$ inches in diameter and makes about 360 revolutions per minute. The speed of delivery of the machine, therefore, is 43.197 yards per minute $\left(\frac{360 \times 1.375 \times 3.1416}{36} = 43.197\right)$.

This result multiplied by the weight of the card sliver per yard, 55 grains, and by 3,600, the number of minutes per week, gives 8,553,006 grains as the total number of grains produced by one delivery in a week. This divided by 7,000, the number of grains in 1 pound, gives nearly 1,222 pounds, which divided into 13,831, the number of pounds of cotton to be handled in a week, gives eleven as the number of deliveries required. As drawing frames are usually built in sections of five or six deliveries, one first, second, and third drawing frame, each containing two heads of six deliveries each, will answer the requirements and also make an allowance for stoppages.

15. Slubbers.—The next machine through which the cotton passes in the proper sequence of operations is the slubber; the production of slubbers is shown in Table V, which is formulated for a machine with a traverse of 11 inches and the full bobbins $5\frac{1}{2}$ inches in diameter.

Digitized by Google

The hank of the slubbing, or roving from the slubber, as figured in the organization of the mill, is .68. Referring to Table V, a .70-hank roving, which is near enough to a .68-hank roving for practical purposes, is produced by the slubber at the rate of 15.86 pounds per day, or 95.16 pounds per week, per spindle. This, divided into 13,831 pounds, gives 145 slubber spindles as the number necessary. Slubber frames are built in various lengths, usually in multiples of 4, the shortest having 40 spindles and the longest 80; therefore, in this case it would be best to have two slubbers, each with 72 spindles.

TABLE V
PRODUCTION OF SLUBBERS

Hank Roving	Revolutions per Minute of Front Roll 1¼ Inch Diameter	Pounds per Day per Spindle
.3	270	37.36
.4	234	29.00
.5	212	23.36
.6	194	19.14
.7	178	15.86
.8	166	13.44
.9	156	11.54
1.0	148	10.08
1.1	141	8.88

16. Intermediate Frames.—The production of intermediate frames is shown in Table VI, which is formulated for intermediates with a 9-inch traverse and a diameter of 4½ inches for the full bobbin. Referring to this table and considering that a 1.90-hank roving is near enough to a 1.87-hank roving for practical purposes, the production of the intermediate frames will be 5.31 pounds per day per spindle, or 31.86 pounds per week. This amount divided into 13,831 pounds gives 434 spindles, and as these intermediate frames are built in multiples of 6, five frames of 90 spindles each will be required.

Digitized by Google

TABLE VI

PRODUCTION OF INTERMEDIATES

Hank Roving	Revolutions per Minute of Front Roll 1¼ Inch Diameter	Pounds per Day per Spindle
.9	212	13.08
1.0	202	11.65
1.1	192	10.44
1.2	185	9.47
1.3	177	8.57
1.4	170	7.81
1.5	165	7.20
1.6	159	6.60
1.7	154	6.07
1.8	150	5.67
1.9	147	5.31

TABLE VII

PRODUCTION OF ROVING FRAMES

Hank Roving	Revolutions per Minute of Front Roll 1⅛ Inch Diameter	Pounds per Day per Spindle
2.0	193	5.33
2.5	171	4.02
3.0	157	3.20
3.5	145	2.61
4.0	136	2.18
4.5	128	1.85
5.0	122	1.60
5.5	116	1.40
6.0	111	1.23

Digitized by Google

17. Roving Frames.—Table VII gives the production of roving frames with a 7-inch traverse and a diameter of $3\frac{1}{2}$ inches for the full bobbin. In this table, the production for a 6-hank roving is shown as 1.23 pounds per day, or 7.38 pounds per week, which when divided into 13,831 gives 1,874 spindles. Fourteen frames of 136 spindles each would be most suitable.

18. Spinning Frames.—Considering next the number of spinning frames, the number of spindles has already been decided on as 10,000. Spinning frames are usually built in sections of 8 spindles, and a frame of about 208 spindles and of the regular gauge is usually preferred. Therefore, in this case forty-eight frames, each with 208 spindles, would be used, giving a total of 9,984 spindles in the mill.

WARP PREPARATION

19. Spoolers.—After the spinning, the filling yarn is ready for the loom, but the warp yarn must pass through several processes before it is ready for weaving. The first machine is the **spooler.** Considering the spindle speed of this machine as 825 revolutions per minute, 20 pounds per spindle per week may be taken as an average production. The production of warp yarn was previously calculated as 1,220 pounds per day, or 7,320 pounds per week; therefore, dividing 20 into 7,320 gives 366 spooler spindles necessary. Spoolers are built in various lengths, for instance, 80, 100, and 120 spindles. In this case four spoolers of 100 spindles each will be necessary.

20. Warpers.—The production of warpers is given in Table VIII, and for 28s yarn with 440 ends on a beam is 2,425 pounds per week. Dividing this into 7,320, the number of pounds of warp yarn produced per week, gives three warpers to be installed.

21. Slashers.—A slasher will prepare the warps for about 500 looms weaving cloth similar to that decided on as the product of this mill. In a mill of this size, since it is

Digitized by Google

very improbable that more than 500 looms will be operated, one slasher may be assumed to be all that is necessary; but in larger mills where a number of slashers are required, the

TABLE VIII

PRODUCTION OF WARPERS

Number of Yarn	Number of Ends				
	260	300	340	380	440
	Pounds Warped in 60 Hours				
10	4,011	4,629	5,246	5,863	6,789
12	3,343	3,857	4,372	4,885	5,657
14	2,865	3,305	3,747	4,188	4,849
16	2,507	2,893	3,279	3,664	4,243
18	2,229	2,571	2,915	3,257	3,771
20	2,005	2,315	2,623	2,931	3,395
22	1,823	2,104	2,385	2,665	3,085
24	1,671	1,925	2,185	2,443	2,829
26	1,543	1,780	2,017	2,255	2,611
28	1,433	1,653	1,873	2,094	2,425
29	1,383	1,596	1,809	2,021	2,341
30	1,337	1,543	1,749	1,955	2,263
32	1,253	1,447	1,639	1,832	2,121
34	1,180	1,361	1,543	1,725	1,997
36	1,115	1,285	1,457	1,629	1,885
38	1,056	1,219	1,380	1,543	1,787
40	1,003	1,157	1,311	1,465	1,697
44	912	1,052	1,192	1,332	1,543
50	806	925	1,049	1,171	1,357

actual number of machines necessary cannot be absolutely decided until the number of looms to be operated is determined.

Digitized by Google

WEAVING AND CLOTH FINISHING

22. Looms.—Dealing now with the weaving, it is first necessary to find the production per week of a loom weaving goods having 80 picks per inch. This may be found by the following rule:

Rule.—*Multiply the speed of the loom by the minutes per week (3,600), and divide by the product of the picks per inch in the fabric and the inches in 1 yard (36). From this result deduct 10 per cent. to allow for the time the loom is stopped for putting in warps, etc.*

In this case it is assumed that the looms will run 185 picks per minute; therefore, the production of a loom per week will be 208.125 yards, as shown by the following calculation: $\frac{185 \times 3{,}600}{80 \times 36} = 231.25$. 10 per cent. of 231.25 is equal to 23.125; therefore, $231.25 - 23.125 = 208.125$ yards.

The production of warp yarn per day is 1,220 pounds, or 7,320 pounds per week, to which must be added 10 per cent. to allow for the increased weight occasioned by the size, making 8,052 pounds of warp yarn to be woven per week.

The production of filling yarn is 970 pounds per day, or 5,820 pounds per week, which, added to the weight of the warp yarn, gives a total production for the weave room of 13,872 pounds per week. The weight of the cloth is 4 yards per pound; therefore, the yards of cloth to be woven per week will be $4 \times 13{,}872 = 55{,}488$ yards. Dividing this total yardage by the production of one loom (208.125 yards) gives practically 266 looms as the number necessary for the weave room.

23. In the cloth room, a mill of this size would require one sewing and rolling machine, one cloth brusher, one folding machine, and one baling press.

BALANCE OF PRODUCTION

24. The foregoing description shows how the equipment of machinery is determined so that the production from the machines at each process will almost exactly balance the

Digitized by Google

amount of material supplied to them from the preceding process or taken from them by a later process; therefore, so long as the mill is maintained on the class of goods for which it was originally intended, there will be no idle machinery, neither will there be an oversupply of material, and thus the whole plant will be kept in constant operation with the largest possible output at the least possible expense.

The most important point in connection with planning the equipment of a mill is to preserve this balance of production at every process, and when the machinery is installed and started at the speeds calculated to give the required products, the yarn and the cloth will be produced within a very small percentage of the amount determined by calculation.

After the mill has once been started and the machinery operated for a few months and thoroughly *limbered up*, a skilful superintendent with a good corps of overseers and help and a good quality of stock will often be able to increase the production at every process and attain better results than have been figured on, but the balance of the machinery will remain the same, for the improvement will be general throughout the whole of the mill. On the other hand, the opposite conditions to these will produce less than the amount calculated, but the deterioration will probably be general throughout the processes, and thus the balance of product be preserved.

Should it be necessary to change the character of the output of the mill at any time, this layout will not be suitable; for instance, in case coarser numbers of yarn are to be spun, there would be insufficient cards. For finer numbers there would be too many cards, and other changes would also be necessary in nearly every process.

SUMMARY

25. Table IX gives the complete list of machines for a 10,000-spindle mill on 4-yard goods made from 28s warp and 36s filling, together with the floor space occupied by each machine, from which can be determined the total floor space

Digitized by Google

and size of the mill that would have to be erected to accommodate this machinery.

TABLE IX

MACHINES AND FLOOR SPACE FOR A 10,000-SPINDLE MILL

Number of Machines	Floor Space
1 bale breaker	9′ 9″ × 7′
1 automatic feeder and opener	10′ 6″ × 6′ 6″
1 breaker picker	17′ 7″ × 6′ 6″
1 intermediate picker	16′ × 6′ 8″
1 finisher picker	16′ × 6′ 8″
17 cards	9′ 10″ × 5′ 2″ each
1 first drawing frame, two heads of six deliveries	10′ 10″ × 3′ 4″ per head
1 second drawing frame, two heads of six deliveries	10′ 10″ × 3′ 4″ per head
1 third drawing frame, two heads of six deliveries	10′ 10″ × 3′ 4″ per head
2 slubbers	31′ 8″ × 3′ 2″ each
5 intermediates	29′ 5″ × 3′ 1″ each
14 roving frames	32′ 11″ × 2′ 11″ each
48 spinning frames	25′ 11″ × 3′ 3″ each
4 spoolers	21′ 3″ × 4′ each
3 warpers	18′ × 8′ each
1 slasher	38′ × 8′
266 looms	16′ × 11′ 10″ for 4 looms
1 sewing and rolling machine	4′ × 2′ 9″
1 brusher	10′ × 4′
1 folder	10′ × 4′
1 baling press	4′ 9″ × 3′

COST

MACHINERY

26. It is now possible to form an estimate of the cost of the machinery in the mill. In addition to the productive machinery, certain pieces of apparatus are necessary in connection with each and ought to be figured in with the machinery cost. For example, in connection with the breaker picker and opener a length of cleaning and of connecting

Digitized by Google

trunk will be required, while in the card room there should be two card-grinding dead rolls, two card-grinding traverse, or Horsfall, rolls, two stripping rolls, a machine for clothing cards, and a flat grinding machine. In the spinning room, a banding machine for making spindle bands is useful, and in the weave room about four drawing-in frames will be necessary. This is outside of the list of regular mill supplies that will be needed.

Table X gives the approximate cost of the necessary machinery for a 10,000-spindle mill. The prices given must not be considered as absolutely correct, since machinery values vary from year to year. The table should be considered, however, as giving approximate prices and illustrating the method of arriving at the machinery costs of a mill rather than the exact cost of the machinery necessary for a 10,000-spindle mill.

TOTAL COST

27. Besides the cost of the machinery, there must be considered the cost of the building, engine and boilers, shafting, belting, mill supplies, fire-protection, plumbing, and similar expenses, as well as the amount reserved for land and tenement houses. The cost of the building, assuming that it will be constructed on the slow-burning principle, may be estimated at $20,000.

Other expenses may be estimated as follows: Engine, boilers, pump, shafting, and pulleys, $15,000; electric-light plant, $2,500; sprinkling system, heating, plumbing, and supplies, $10,000; miscellaneous and incidental expenses, including freight, erection of machinery, etc., $3,000; this gives a total cost for the mill building and equipment of $140,051. To this add $20,000 for the purchase of land and erection of tenement houses for the operatives, which brings the total cost to about $160,000, or $16 per spindle. The erection of tenement houses is not properly a charge on the cost of the mill and therefore might be omitted in figuring out the cost per spindle, but other unforeseen expenses would probably compensate for this item. With a

Digitized by Google

TABLE X

COST OF MACHINERY FOR A 10,000-SPINDLE MILL

Number of Machines	Cost
1 bale breaker and conveying apron	$ 450
1 automatic feeder and opener	500
1 breaker picker (two sections)	1,000
Cleaning and connecting trunk	300
1 intermediate picker	700
1 finisher picker	700
17 revolving-flat cards, $580 per card	9,860
2 card-grinding dead rolls, $39 each	78
2 card-grinding traverse rolls, $57 each	114
2 stripping rolls, $15 each	30
1 machine for clothing cards	100
1 flat-grinding machine	190
First drawing, one frame, two heads, six deliveries each, $60 per delivery	720
Second drawing, one frame, two heads, six deliveries each, $60 per delivery	720
Third drawing, one frame, two heads, six deliveries each, $60 per delivery	720
2 72-spindle slubbers, $14 per spindle	2,016
5 90-spindle intermediates, $10 per spindle	4,500
14 136-spindle roving frames, $7 per spindle	13,328
48 208-spindle spinning frames, $3.25 per spindle	32,448
1 banding machine	125
4 100-spindle spoolers, $2.75 per spindle	1,100
3 warpers with creels, $250 per warper	750
20 section beams, $10 per beam	200
1 slasher	1,200
1 size kettle and overhead track	250
4 drawing-in frames, $13 each	52
266 looms, $60 per loom	15,960
1 sewing and rolling machine	90
1 cloth brusher	600
1 cloth folder	250
1 baling press	500
Total	$89,551

Digitized by Google

corporation capitalized at $180,000, this would leave a balance of about $20,000 for stocking the mill with cotton, starting it in operation, meeting the initial working expenses of the plant, and leaving a substantial balance for working capital.

The prices and figures given are, of course, estimates only, as many of the items depend on local conditions, while the prices of machinery and other equipments are subject to the fluctuations of the markets.

LAYOUT OF MACHINERY

28. The engineer is now in a position to submit a complete plan to the executive officers of the corporation, and when it has received their approval, the planning of the arrangements of the machinery can be undertaken. It will be assumed that a two-story mill with the monitor-roof construction, similar to that shown in Fig. 1 is to be erected, the engine room and boiler house to be one-story, annexed structures, as shown in the end elevation in Fig. 2. With such a mill, the best arrangement is to have the opening, picking, carding, and spinning departments on the first floor, and the warp preparation, weaving, and cloth room on the second floor, where the light will be better, on account of the monitor-roof of the mill. The first step in arranging the layout of the machinery for the mill is to cut pieces of cardboard or paper to correspond to the dimensions of, or floor space occupied by, each machine to the same scale as the floor plans of the mill. For example, if a machine is 16 feet long and 4 feet wide and the plans for the mill are drawn on the scale of $\frac{1}{4}$ inch to the foot, a piece of cardboard 4 inches long and 1 inch wide is prepared, and so on for the different sizes of machines. If there are ten machines all of one size, ten pieces of cardboard are cut; thus a collection of pieces of cardboard is made equivalent in number to all the machines in the mill.

29. The floor plans of each floor of the mill are then pinned down flat on a table and the pieces of cardboard

Digitized by Google

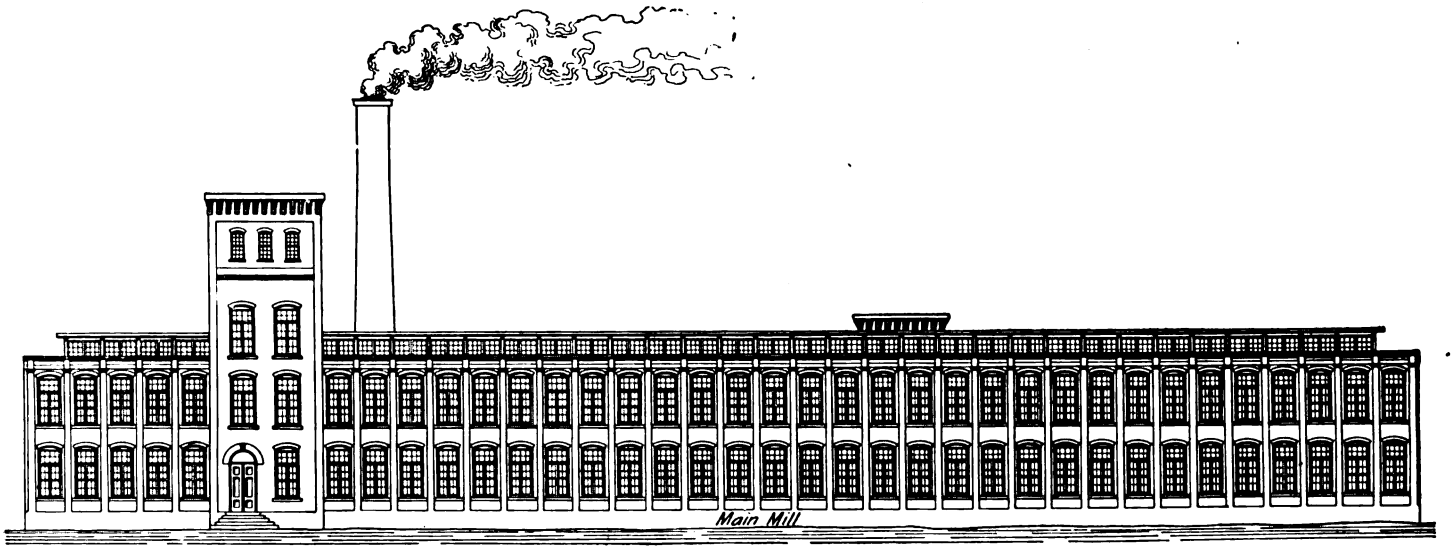

FIG. 1

Digitized by Google

FIG. 2

Digitized by Google

placed on them, avoiding columns and leaving adequate space for passageways and storage of material. The cardboard pieces can be moved around and tried in different positions and the spaces between them enlarged or reduced to provide for different widths of passageways between the machines, until the most suitable arrangement is determined, when the outlines of the slips are drawn in on the plans. This method will be found much superior to that of making one drawing after another, each showing the machinery in various positions, and will save considerable time. This is the method followed in Figs. 3 and 4, which are the first- and the second-floor plans of the mill shown in Figs. 1 and 2, showing the arrangement of the machinery for a 10,000-spindle mill, the number of machines being as figured. On these plans all the machinery has been accommodated and ample passageways allowed, as well as space for storing bobbins and other material. The machinery has also been arranged with a view to convenience in operation.

After the positions of the machines are determined and drawn in on the plans, a tracing of this drawing can be made and the lines of shafting shown running between and above the machines in the best positions for driving them, with the positions of the pulleys and couplings marked thereon. The mill plans are then practically complete, assuming that the drawings for the actual construction of the building have been made and accepted by the corporation.

MILL SUPPLIES

30. For the successful operation of each department of the mill, tools and other supplies are necessary. The following lists include supplies that are either necessary or convenient in the operation of the mill, but are by no means complete, since supplies necessary in one mill would not be necessary in others; many items that can be obtained locally have also been omitted from the lists.

31. Picker and Card Rooms.—One full-ironed picker truck for cotton bales; 1 lap scale (spring balance to weigh

Digitized by Google

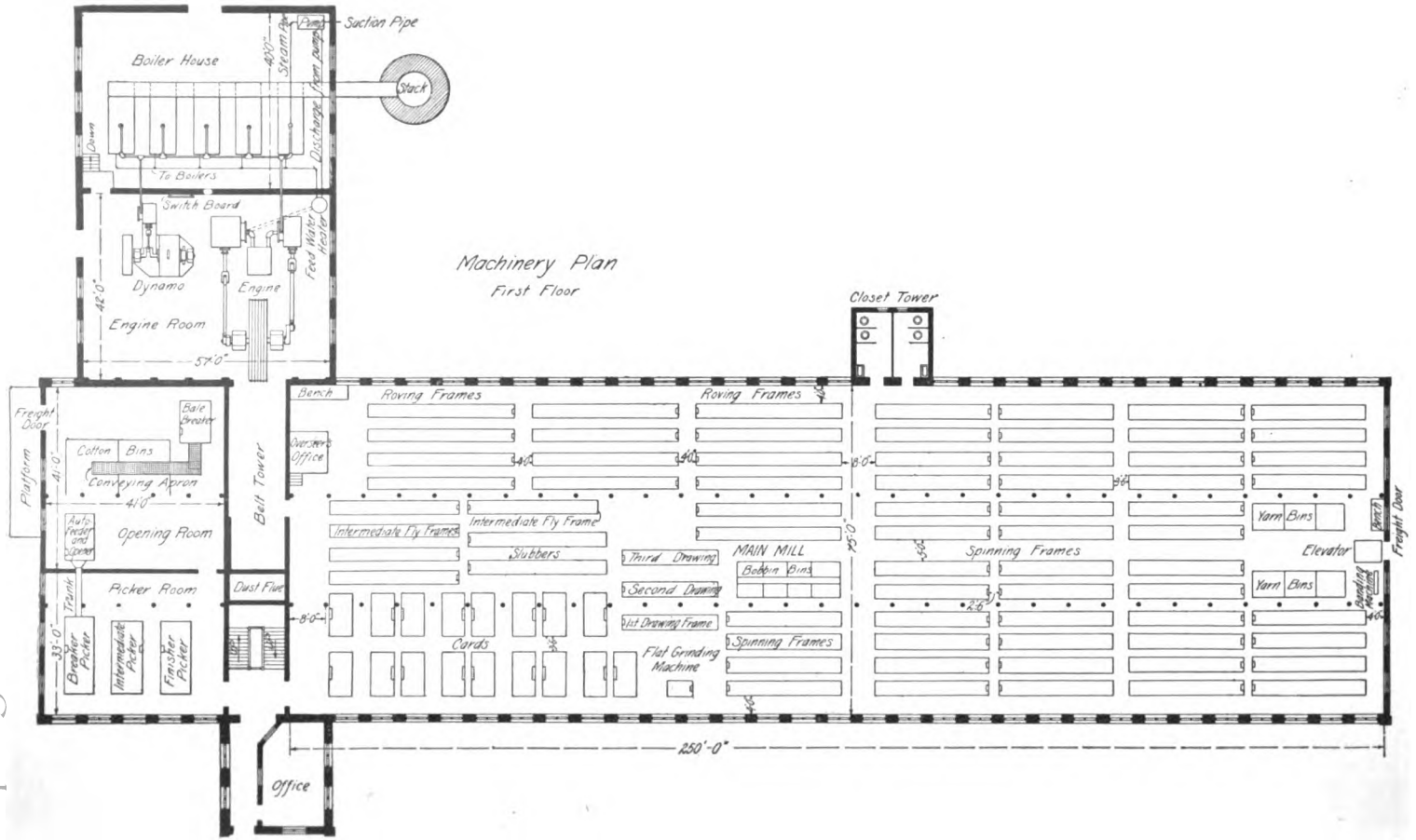

FIG. 3

Digitized by Google

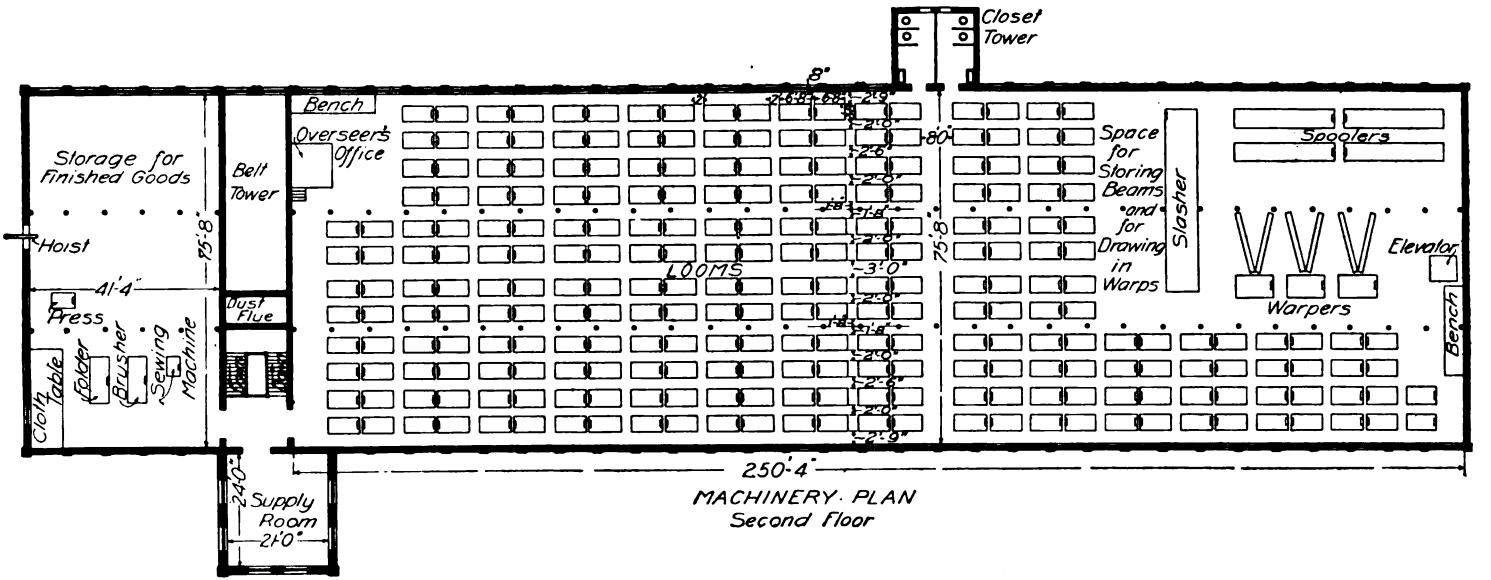

MACHINERY PLAN
Second Floor

Fig 4

Digitized by Google

up to 56 pounds and with scale end for lap); 35 lap sticks; 1 card hammer for fastening card clothing; 5 papers of flat-head card tacks; 2 quarts of card-cylinder plugs; 1 quart of $\frac{3}{8}$-inch shoe pegs; 6 pairs of 21-inch hand cards; 1 set of gauges 5-, 7-, 10-, and 12-thousandth-inch; 2 card brushes for brushing out card wire by hand; 2 wire roller brushes for brushing out card wire by power; 500 feet of $\frac{3}{8}$-inch cotton banding for cards; 2 sets of **S** wrenches; 1 8-inch monkey-wrench; 1 12-inch monkeywrench; 2 cold-chisels (different sizes); 2 sets of files (assorted); 2 hammers; 1 10-inch screw-driver; 1 card knife; 1 stripping truck; 2 waste boxes; 2 rolls of emery fillet; 2 rolls of fillet for stripping brush; 1 vise with $3\frac{1}{2}$-inch jaws.

32. Drawing and Fly Frames.—Two thousand 11-inch slubber bobbins, wired and varnished; 1,000 skewers for same with hardwood tips; 8,000 9-inch intermediate bobbins, wired and varnished; 4,000 skewers for same with hardwood tips; 42,500 7-inch fine-frame bobbins, wired and varnished; 20,000 skewers for same with hardwood tips; 1 roving reel; 1 roving scale; 1 set of **S** wrenches; 1 12-inch monkeywrench; 2 cold-chisels (different sizes); 1 set of files (assorted); 1 hammer; 1 10-inch screwdriver; 1 set of roll gauges; 1 dozen bobbin baskets.

33. Spinning.—Thirty thousand warp bobbins for $6\frac{1}{2}$-inch traverse; 40,000 filling bobbins for $6\frac{1}{2}$-inch traverse; 12 traveler brushes; 50 boxes of assorted travelers, numbers 2 to 12/0, for 28s warp and 36s filling; 1 pair of yarn scales; 1 yarn reel; 1 yarn tester; 1 set of **S** wrenches; 1 12-inch monkeywrench; 2 cold-chisels (different sizes); 1 hammer; 1 set of files (assorted); 1 set of roll gauges; 1 spindle gauge; 4 balls of $\frac{3}{16}$-inch spindle banding; 1 vise with $3\frac{1}{2}$-inch jaws; 1 10-inch screwdriver.

34. Warp Preparation.—Five thousand spools, 6-inch traverse, 4-inch heads bushed; 1,600 skewers for same; 50 slasher combs, 44 inches wide; 1 roll of slasher cloth; 6 draw-ing-in hooks.

Digitized by Google

35. Weaving.—Six hundred pickers; 600 picker loops; 4 gross of lug straps; 1,200 loom lagscrews; 1,200 washers for same; 3 sets of **S** wrenches; 3 10-inch monkeywrenches; 3 hammers; 3 cold-chisels; 2 vises with 3½-inch jaws; 1 set of files (assorted); 600 shuttles; 300 sets of loom strapping; 275 pairs of temples with plates; 300 filling forks; 8 gross of single-jointed 3-inch jack-hooks, No. 7; 8 gross of **T** hooks, No. 12; 4 gross of clamps for treadle straps; 350 reeds; 350 sets of harnesses; 500 extra harness eyes; ½ gross of 4½-inch weavers' scissors; ½ gross of weavers' combs; ½ gross of loom dusters; ½ gross of reed hooks; 3 pairs of reed pliers; 1 ½-inch pick glass; 1 1-inch pick glass; 2 short beam trucks.

36. Repair Shop.—One set of 10-inch belt clamps; 6 revolving belt punches; 2 dozen of assorted drive punches; 6 belt awls; 1 stripping gauge; 1 belt lap shave; 4 boxes of copper rivets and washers, Nos. 8, 9, 10, and 12; 1 glue pot; 20 pounds glue; 250 oak-tanned leather slabs; 1 24-inch Stillson wrench; 1 8-inch Stillson wrench; 1 10-inch Stillson wrench; 1 16-inch Stillson wrench; 2 18-inch monkeywrenches; 4 10-inch monkeywrenches; 4 8-inch monkeywrenches; 2 sets of **S** wrenches, No. 76 to No. 81 (No. 76, $\frac{3}{8}$- and ½-inch; No. 77, $\frac{1}{3}\frac{9}{2}$- and $\frac{1}{1}\frac{1}{6}$-inch; No. 78, $\frac{1}{1}\frac{1}{6}$- and $\frac{7}{6}$-inch; No. 79, $\frac{2}{3}\frac{5}{2}$- and $\frac{3}{3}\frac{1}{2}$-inch; No. 80, $\frac{3}{3}\frac{1}{2}$- and $1\frac{1}{1}\frac{1}{6}$-inch; No. 81, $1\frac{1}{1}\frac{1}{6}$- and $1\frac{7}{1}\frac{1}{6}$-inch); 1 bench vise with 3½-inch jaws; 1 bench vise with 6-inch jaws; 1 No. 3 pipe vise; 1 10-pound sledge; 1 3-pound hammer; 3 machinist hammers (assorted); 3 ball-peen hammers, 4, 8, and 16 ounces; 2 riveting hammers, 4, 8, and 12 ounces; 1 No. 1 Saunders' pipe cutter; 1 No. 2 Saunders' pipe cutter; 6 extra cutters for each; 1 set of pipe taps, ¼- to 1½-inch; 1 No. 1 stock and die; 1 No. 1½ stock and die; 1 No. 2 stock and die; 1 complete set of taps and dies with tap wrenches and stocks; 1 ratchet-drill stock and assortment of drills; 1 breast-drill stock; 1 upright drilling machine, 21 inches, back-geared; 1 set of straight-shank twist drills, $1\frac{1}{1}\frac{1}{6}$ inches to ½ inch by 32ds; 1 set of taper-shank drills, ¼ inch to 1 inch by 16ths; 1 twist drill and wire gauge; 1 set of drill sockets (assorted); 1 No. 2

Digitized by Google

jack-screw; 1 No. 4 jack-screw; 1 No. 10 jack-screw; 1 18-inch lathe; 8-foot bed engine lathe; 1 drill chuck; 1 4-jaw chuck for a lathe with independent jaws; 1 forge; 1 150-pound anvil; 2 blacksmith sledges; 12 blacksmith tongs (assorted); 1 grindstone frame and stone; 1 emery-wheel frame; 2 12″ × 1″ emery wheels, 1-inch holes; 1 No. 3 emery grinder; 4 bars of solder; 1 bottle of soldering acid; 1 soldering copper; 1 hack-saw frame and 1 dozen blades; 1 set of reamers for brace, ½-inch to ¾-inch; 4 dozen assorted files; 4 pairs of pliers; 1 No. 3 chain tongs; 4 pairs of calipers (2 outside and 2 inside, large and small); 1 pair of tinners' shears; 2 pairs of 10-inch shears; 1 plumb-bob; 1 gear-cutting and drilling machine with a set of cutters; 1 set of cold-chisels; 1 micrometer caliper; 2 machinists' scales, 6-inch and 12-inch; 2 try squares, 4-inch and 8-inch; 1 combination square; 1 machinists' level; 1 screw-pitch gauge; 1 surface gauge; 1 pair of dividers; 1 set of screwdrivers; 2 center punches; 1 set of reamers, ⅛ inch to 2 inches by 16ths; 1 lathe; 1 set of lathe dogs; 1 set of lathe cutters; 1 set of pinch bars; 2 crowbars; 1 set of roll spreaders; 12 coils of steel wire (assorted); 12 coils of brass wire (assorted); 6 coils of copper wire (assorted); 1 oil tank; 1 assortment of spring cotters; 1 assortment of standard size bolts and nuts; 1 assortment of standard size setscrews; 1 assortment of standard size wood screws; 1 set of carpenters' tools.

37. Hose Houses.—Eight hundred feet 2½-inch rubber-lined hose pipe coupled every 50 feet; 8 standard nozzles, Underwriters', 30 inches; 10 hose spanners; 8 bars; 8 fire-axes; 4 lanterns; 1 hose wagon; 2 single ladders; 1 adjustable ladder.

38. Miscellaneous.—Five hundred fiber cans, 10 inches by 36 inches; ½ piece clearer cloth; 2 60-gallon oil tanks; 1 engineers' oiling set of five pieces; 6 No. 16 brass oilers; 3 No. 11 steel oilers; 100 common oilers; 1 bale 8-ounce 40-inch burlap; 1 roll of fiber packing paper; 12 reels of 4-ply sisal, $\frac{5}{16}$ inch; 1 package of twine; 4 dozen picking needles; 2 sides of lace leather; assortment of belt hooks; 2 reams of assorted sandpaper; 1 ream of assorted emery cloth; 1 case

Digitized by Google

of mill crayons (assorted); 1 gross of oil crayons; assortment of belting (single and double); ½ gross of clearer brushes; 1 gross of hand brushes; ½ gross of finger brushes; 1 box of ¼-inch packing; 1 box of ½-inch packing; 1 box of ⅝-inch packing; 1 box of ¾-inch packing; 6 balls of asbestos wick packing; 3 yards of 1/16-inch packing; 2 pounds of gum arabic; 2 pounds of stamping blue; 10 pounds of graphite; 100 galvanized fire-buckets; 72 fire-bucket hooks; 1 gross of mill brooms; 5 8-day time clocks, 10-inch face; 1 double speed indicator; 3 engineers' hand lamps; 2 watchmen's lanterns; 1 medium-size hand truck; 2 coal barrows; 1 1,000-pound scales; 1 600-pound scales; 48 doffer-box rollers and stands; 24 doffer-box casters; 24 oblong leatheroid doffer-boxes, usual size; 1 pair of union balances, 28 pounds; 1 pair of scoop balances; 2 dozen waste cans; 1 box of ⅝-inch gaskets; 2 cans of belt dressing; assortment of paint; assortment of paint brushes; ½ dozen floor mops and handles; 1 dozen drinking cups; 1 barrel of spindle oil; 1 barrel of machine oil; 1 barrel of cylinder oil; 1 barrel of whiting; 1 barrel of soap powder; 1 stenciling outfit; 2 coal shovels; 1 set of furnace irons; 3 doffers' trucks for spinning frames; 3 beam trucks for loom fixers; 24 wooden bobbin boxes for spinning frames.

Digitized by Google

Digitized by Google

REELING AND BALING

REELING

INTRODUCTION

1. A *skein* is one of the forms in which yarn is put up for sale or for convenient handling at a future process. Yarn mills adopt this method of putting up yarn to a large extent for convenience in transportation to their customers, as the skeins can be packed in bags or bales and transported without damage; often, also, customers require the yarn to be put up in this manner, since it is the most convenient form in which filling yarn for certain kinds of goods can be subjected to such processes as bleaching, dyeing, mercerizing, polishing, printing, and so on. Yarn intended for filling is sold in skein form more frequently than yarn intended for warp, although this depends somewhat on the fabric to be woven; for some goods it is customary to put up warp yarn in skeins. Knitting yarn that has to be passed through the processes named is also made into skeins.

The **skein** is made by a process of reeling, and the word indicates a continuous coil of yarn that has been wound around a revolving frame of a known circumference. It is tied around at one or more points in its circumference, so that when removed from the frame on which it is made it forms a loose coil that may be treated or handled without damage and unwound at a succeeding process. Skeins vary in circumference, in the length of the yarn composing them, and also in the manner in which the yarn is arranged.

For notice of copyright, see page immediately following the title page

Digitized by Google

In the United States, the name skein is applied to any length or description of skein, and the process of making it is called *reeling*. In other English-speaking countries, the word *hank* is more frequently given to a skein when it contains exactly 1 hank, as for example, 840 yards of cotton or 560 yards of worsted, or multiples of these lengths, such as double hanks, containing 1,680 yards of cotton or 1,120 yards of worsted; but the process of making hanks is always called reeling. When lengths that are not complete hanks or multiples of hanks are made, it is customary in these countries to speak of the process as *skeining* or *skein reeling* and of the product as skeins. These terms indicate that the skeins are made of a certain weight or a certain length usually less than that of complete standard hanks.

Reeling is a process common to cotton, woolen, worsted, linen, silk, and other materials, the machine in common use for making skeins being known as a *reel*.

REELS

2. The **reel** is one of the simplest machines used in textile-mill work, its essential parts consisting only of a revolving framework around which the yarn can be wound, a creel to hold the yarn being reeled, and some smaller attachments, such as doffing arrangement, traverse motion, measuring motion, etc.

3. Passage of the Yarn.—An ordinary type of reel used in the United States is shown, in perspective, in Fig. 1 and, in section, in Fig. 2. The yarn passes from the bobbin *a*, which is supported by the spindle *b*, through an eye in the guide wire *c*, and around the revolving framework *d*, which is called a *swift;* the yarn forming the skein is shown at *e*. In American types of reels, the yarn passes downwards from a creel fitted with spindles in the upper part of the reel. In European reels, the creel sometimes is below the swift, the yarn passing upwards to it, but in other cases the arrangement is the same as the American type.

Digitized by Google

4. Creels are of various types, depending on whether the yarn has to be wound from a cop, a filling-wind bobbin, a warp-wind bobbin, a spool, or from some other formation. The ordinary type of creel is the one shown in Figs. 1 and 2. In this case the machine is shown reeling from warp-wind spinning bobbins, but the creel is so constructed that winding

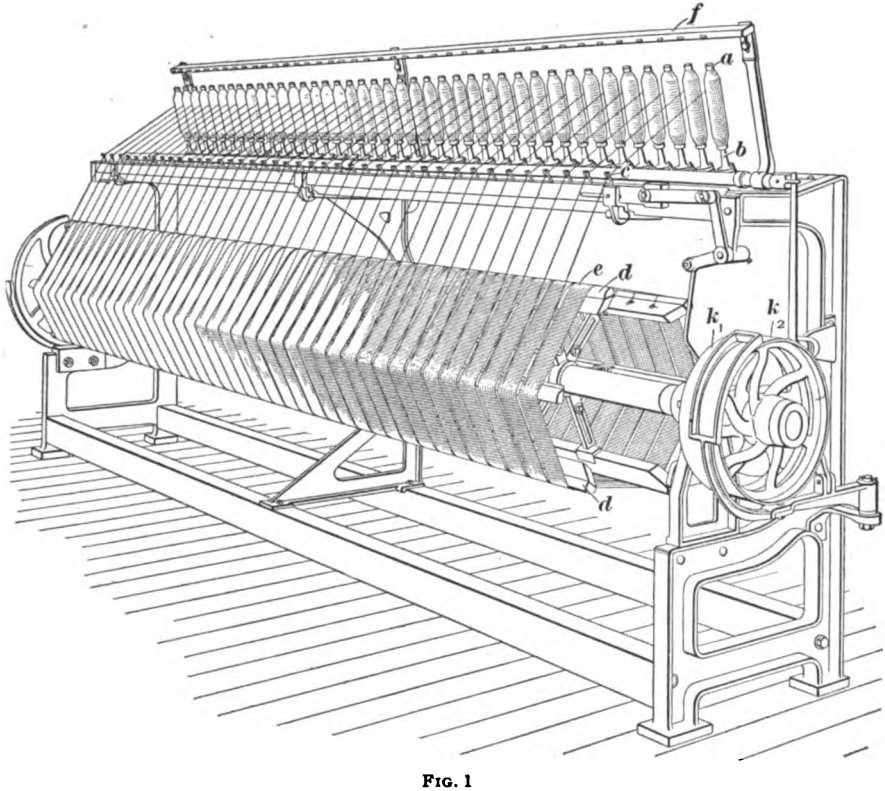

FIG. 1

can take place from warp-wind bobbins, spools, or parallel tubes, or, by using the guide rail *f*, from filling-wind bobbins, or conical tubes.

The creel consists of the framework that supports the spindles *b*, the guide rail *f*, and the receptacle *g* for holding both full and empty bobbins. The spindles are of the common

Digitized by Google

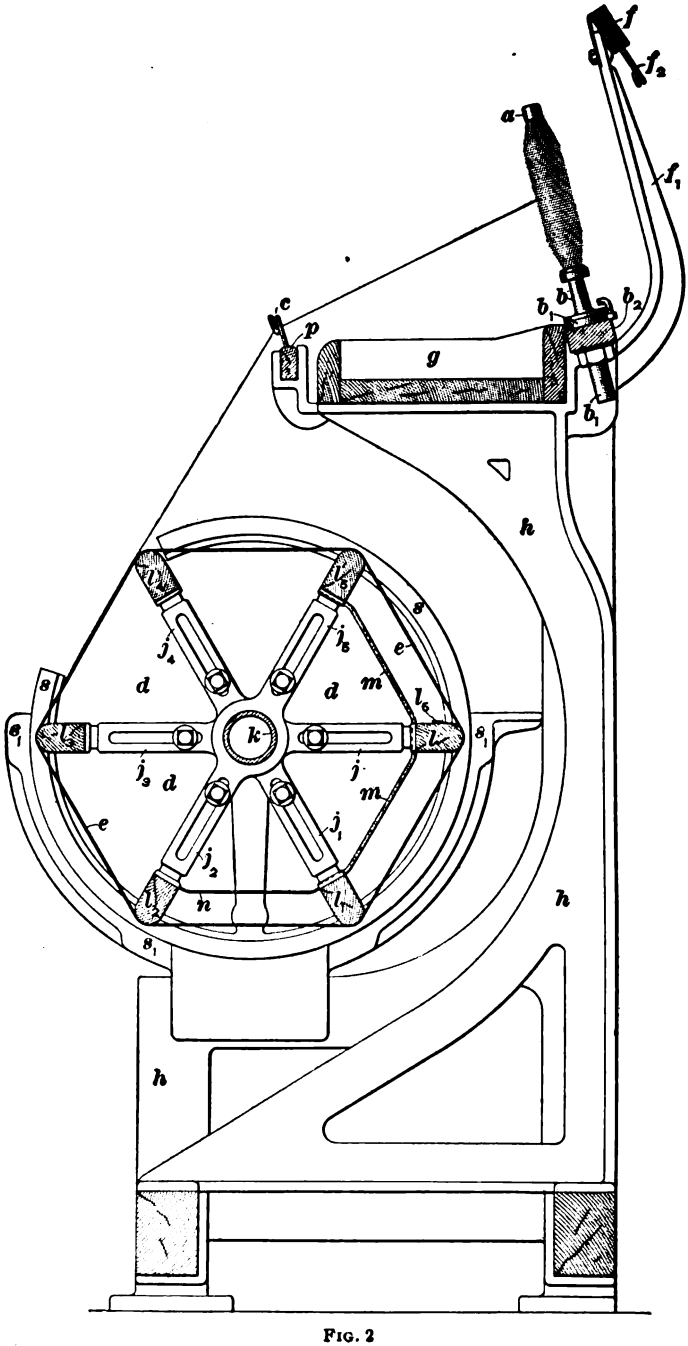

FIG. 2

Digitized by Google

type and rest in the base b_1, which is supported by the rail b_2. They are made to suit the form of bobbin that is to be used and are constructed to revolve easily by means of a light, uniform pull exerted by the yarn. The spindle shown in use for warp-wind spinning bobbins in Fig. 2 can be used in the same manner for worsted, mohair, and other yarn wound on bobbins with a straight traverse.

The guide rail f is supported by three arms similar to f_1 and carries the same number of guide wires f_2 as there are spindles. In Fig. 2, the rail is shown thrown out of position, as it is only intended to be used in reeling from those forms of yarn in which the end has to be drawn over the nose, such as cops and filling-wind bobbins. When in use, it is in the position shown in Fig. 3. In this case the yarn is shown passing from a cop through the guide wire f_2 in the guide rail f and thence to the guide c in the traverse. When a reel is intended to be used for cops, the revolving spindle and base, such as are shown in Fig. 2 at b and b_1, respectively, are not used, but the creel is constructed with a number of sockets b_3, in which a steel or wooden skewer b_5 can be fitted, as shown in Fig. 3; the cops b_4 are placed on these skewers. These skewers are spoken of as *dead spindles* to distinguish them from the revolving, or *live, spindles*. When winding from a wooden bobbin in which the yarn is built with a short traverse, as in the case of filling-wind spinning bobbins, it is not necessary

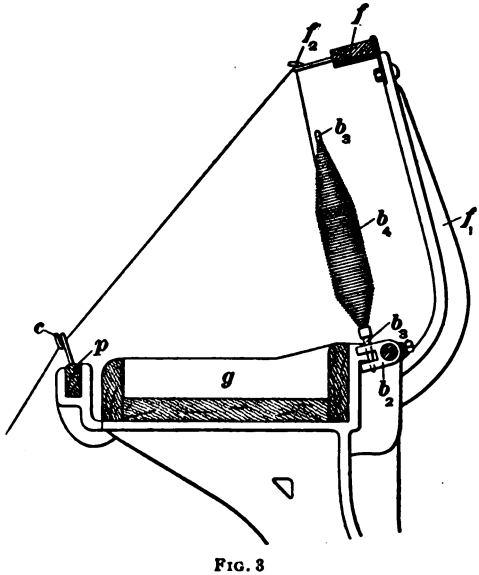

FIG. 3

Digitized by Google

to adopt the creel construction shown in Fig. 3, as the style shown in Fig. 2 may be used by placing the bobbins on the spindle and drawing forwards the guide rail, passing the end through the eye of the guide wire f_3.

The receptacle g is a long, shallow, wooden box extending the entire length of the frame and supported by the sampsons h. The guide wires c, of which there are the same number as there are spindles, guide the yarn in its passage from the bobbins to the swift; they are of the ordinary type and are screwed into a long wooden rod p that extends the entire length of the frame and forms a part of the traverse motion.

5. The **swift** of the reel, on which the yarn is wound, is shown in Figs. 2, 4, and 5. It consists of several groups of supporting arms evenly distributed throughout the length

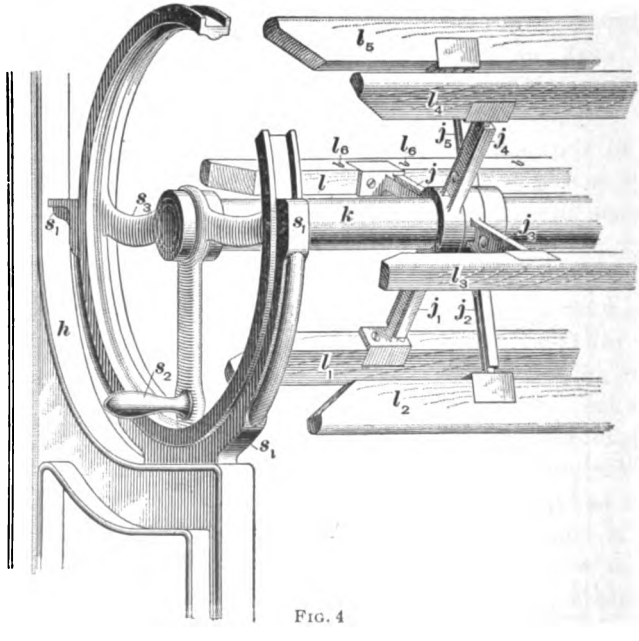

FIG. 4

of the reel. Each group, as shown in Fig. 2, consists of three sets of these arms, j, j_3; j_1, j_4; j_2, j_5; bolted to the arms are extension pieces that carry at their outer ends long

Digitized by Google

wooden rails $l, l_3, l_1, l_4, l_5, l_6$, respectively. These extension pieces can be moved inwards or outwards, and thus the distance around the swift (usually spoken of as the circumference, although this is not a strictly accurate term) decreased or increased, so that different sizes of skeins can be made. The standard sizes of skeins are 54 inches, 60 inches,

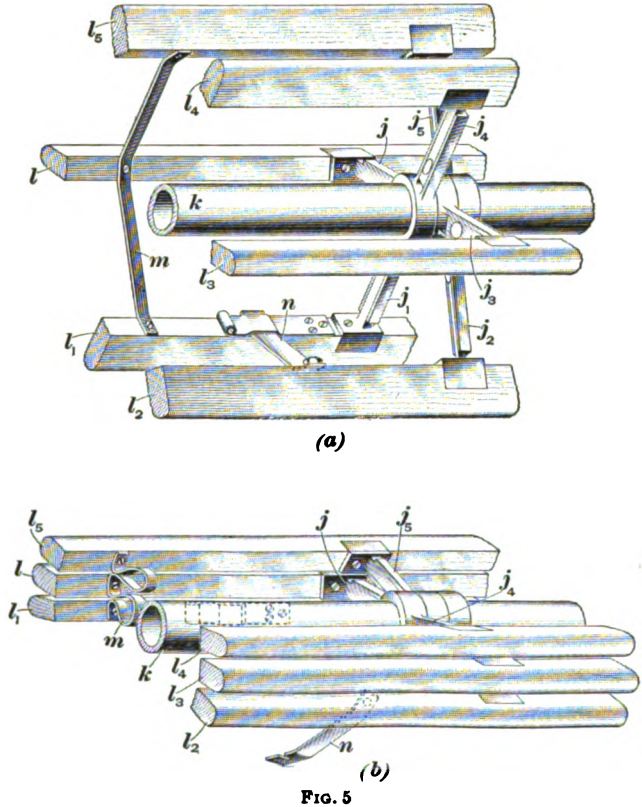

FIG. 5

72 inches, and 90 inches, but only specially constructed reels can be adjusted to make all sizes. Reels are ordinarily constructed to make either 54-inch, 60-inch, or 72-inch skeins.

The arms j, j_5 of the swift are parts of a casting that is fastened on a long, hollow shaft k; the arms j_1, j_4 and the arms j_3, j_2 are similarly constructed, but instead of being

Digitized by Google

fastened to the shaft k are free to swing on it, and must therefore, in some way, be held rigidly in place when the yarn is being wound on the swift. This is accomplished by means of the leather strap m, Fig. 2 and Fig. 5 (a), and the steel latch n, both of which are attached to the rails, generally at about the middle of the swift. The strap connects the rails l_3, l, l_1, while the latch connects the rails l_1, l_2; thus, each rail is held in its proper position, with an equal distance between each two. When the strap is tightened and the latch n is in position, the arms are held rigidly, as shown in Figs. 2, 4, and 5 (a), and can be revolved in that position. The shaft k revolves in bearings situated at each end of the frame, the tight and loose driving pulleys k_1, k_2 being situated on this shaft, as shown in Figs. 1 and 6.

6. The traverse motion used on this reel is shown in Fig. 6 and is very simple. The yarn from each bobbin is wound on the swift over a short section of its length, as shown in Fig. 1. This is accomplished by imparting a slight, but rapid, reciprocating motion to the rail p in which the guide wires c are fastened, which results in the yarn being wound in a zigzag path on the swift, thus producing what is known as *cross-reeling*. In ordinary cross-reeling, the crossings do not occur in the same place with each succeeding layer. The width of the skein depends on the throw of the traverse, which is usually about $2\frac{1}{4}$ inches, depending on the space between spindles.

The rail p receives its reciprocating motion as follows: The shaft k carries a 38-tooth spur gear q, which drives a spur gear q_1 of 62 teeth. On the shaft with q_1 is a crank-arm q_2 connected at q_3 to a connecting-rod q_4, which, in turn, is attached at the point r_1 to a bell-crank lever r pivoted at r_2. Connected to the bell-crank lever at the point r_3 is a connecting arm r_4 that is pivoted to a casting r_5 attached to the rail p. In this manner a rapid traverse is imparted to the guide c as the shaft k rotates.

The crank-arm q_2 is provided with a slot so that the stud q_3 may be moved nearer the center around which it revolves,

Digitized by Google

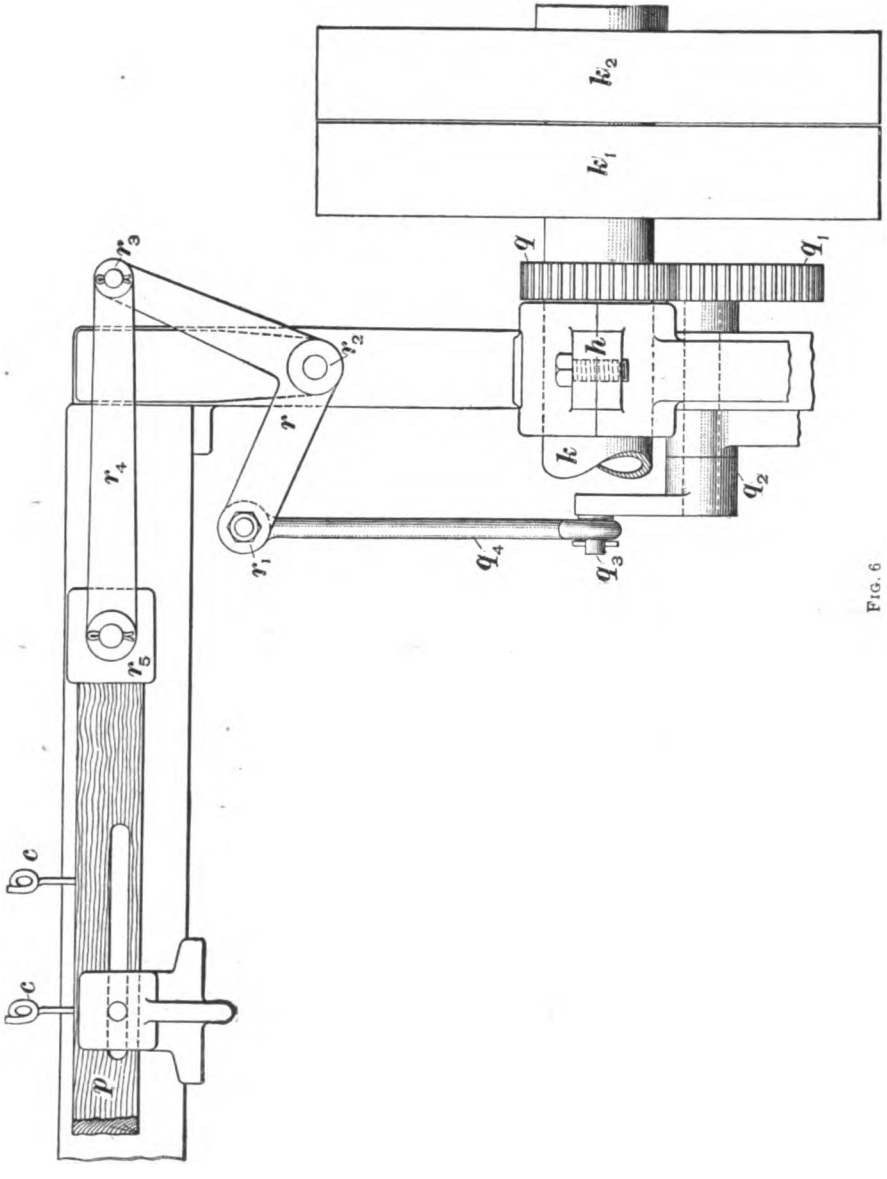

FIG. 6

Digitized by Google

thus reducing the throw of the crank and consequently lessening the distance through which the guides *c* move, and producing a shorter traverse.

METHODS OF REELING

7. Both the expressions *plain reeling* and *cross-reeling* are frequently applied, in American mills, to the method of making skeins by a machine arranged as described. Plain reeling is often understood to refer to the making of a skein with a narrow traverse, which is usually done in the case of skeins of a short length or skeins through which tie-yarn will not be passed. Cross-reeling is often applied to skeins made on the same machine and with the same traverse motion, but so set as to produce a skein with a wide traverse, which is necessary when the yarn has to be spread sufficiently to enable leasing to be performed; that is, to allow tie-yarn to be passed through the skein. The traverse is sometimes so long as to extend to the extreme limit of the space allotted each skein on the frame or even beyond, in the latter case preventing the use of every spindle. In such cases, alternate spindles only are used for single reeling; for double reeling, when two ends are to be wound together, a supply of yarn is placed on every spindle, but two ends passed through one guide eye. As a matter of fact, both of these methods are really cross-reeling, the only difference being in the length of the traverse. It is preferable not to apply the expression plain reeling to any kind of cross-reeling, as its use tends toward confusion by creating the impression that some other style of reeling than cross-reeling is referred to, and also conflicts with the English practice, where the expression plain reeling means lea reeling. Cross-reeling by means of the mechanism shown in Fig. 6 is one of the simplest and most commonly used methods of reeling in America, but other methods are in use. Among those that differ according to the method of laying the yarn on the swift of the reel are: (1) *Grant*, or *long-diamond*, *reeling*, and (2) *lea*, or *wrap*, *reeling;* while among those that depend on the length

Digitized by Google

wound on the swift are: (3) *French reeling*, in either cross-reeling or lea reeling, and (4) *skeining*, or *grain reeling*.

8. **Grant, or long-diamond, reeling** is really a variety of cross-reeling by which the yarn is arranged on the swift with well-defined crossed layers in an elongated-diamond form. This is obtained by giving a quick reciprocating motion to the traverse rod, the time of which has a definite relation to the time occupied by one revolution of the swift; this causes each new layer of yarn to wind on the same part of the swift as some previous layer, thus forming a series of layers in different positions but having the crossings coming together. Some of the longest skeins are made on this system, the reel not being stopped when a hank has been wound, as in some systems, but allowed to run until the skein is sometimes composed of thousands of yards, as many as ten hanks of fine yarn being often made into one skein.

9. **Lea reeling** is the name given to a method of reeling cotton yarn in which the yarn is arranged on the swift of the reel in separate leas of 120 yards each. As a cotton reel is usually arranged with a circumference of 54 inches, 80 turns of the swift are required to wind 120 yards. The most common method is to reel yarn in 7-lea skeins. For this the cross-traverse motion of the reel is disconnected and an arrangement adopted by means of which the traverse rod remains stationary until the swift of the reel has revolved 80 times, which winds 120 yards around it. Then the traverse is moved slightly and quickly so as again to wind 80 revolutions of yarn, or 1 lea, around the swift, when the traverse is again moved a short distance. This is repeated until there are 7 leas arranged on the swift, consisting of a continuous thread of yarn from the bobbin on one spindle; this arrangement is, of course, repeated along the surface of the swift as many times as there are spindles. A view of a portion of a 7-lea skein is shown in Fig. 7 (*b*). When the reeling of the skein is completed, the swift is stopped automatically. In 6-lea reeling, the yarn is reeled in the same way as in

Digitized by Google

7-lea, the difference being in the method of tying up, as shown in Fig. 7, where (*c*) represents 7-lea and (*b*) 6-lea; the length of the skein is the same in both cases. The table of measurement for cotton yarn is as follows:

$1\frac{1}{2}$ yards = 1 thread, or circumference of a cotton reel
120 yards = 80 threads = 1 lea
840 yards = 560 threads = 7 leas = 1 hank

10. Wrap reeling, as applied to worsted yarn, is on the same general principles as lea reeling for cotton. A worsted reel, however, is usually arranged with a circumference of 72 inches and a wrap, as shown by the table, contains only 80 yards. The table for worsted yarn is:

2 yards = 1 thread, or circumference of a worsted reel
80 yards = 40 threads = 1 wrap
560 yards = 280 threads = 7 wraps = 1 hank

11. French reeling corresponds to ordinary reeling except that the swift is adjusted with a circumference of 1 meter (39.37 inches); yarn is reeled in this way for consumption and sale in those countries in which the meter is the standard of measurement. French reeling may be either cross-reeling or lea reeling. If the latter, the swift is usually revolved 100 times for each division, giving 1 hectometer, and 10 of these divisions (1 kilometer) are made into a skein.

12. Skeining, as it is known in England, is sometimes called **grain reeling,** since the skein may be required to weigh a certain number of grains; and is sometimes called *length reeling*, since the skeins are required to be of such a length as gives a designated weight; it is also known as *thread reeling*, since the length required is made up of a certain number of threads, each of which in the case of cotton measures 54 inches, or in the case of worsted, 72 inches. Each skein has to be of an exact weight, generally expressed by the fractional part of an ounce, for example $\frac{1}{2}$, $\frac{1}{3}$, $\frac{1}{4}$, $\frac{1}{5}$, $\frac{1}{6}$, $\frac{1}{8}$, $\frac{1}{10}$, or $\frac{1}{12}$ ounce; it may, however, be expressed in grains, either 200, 100, 75, 50, 25 grains, and so on. In such cases,

Digitized by Google

the length of yarn that comprises the weight required must be determined by calculation. The arrangement of the reel is similar to that for lea reeling, so as to move the traverse when the required number of revolutions have been made by the swift.

Skeining, or grain reeling, should not be confused with the usual American method of defining the weight of an ordinary cross-reeled skein. It is frequently the custom for American buyers of skeined yarn to specify that each skein shall weigh a certain number of ounces; for instance, $1\frac{1}{2}$, $2\frac{1}{2}$, 3, or 5 ounces, or any other reasonable weight. These weights greatly exceed the customary weights of skeins made by the grain- or thread-reeling systems on reels provided with measuring motions so as to give exact lengths. The customary American method is not to use measuring motions on the reel to give the weight of skein required, but to determine this by supplying to the reel tender cops or bobbins containing a certain weight of yarn. For example, if a 5-ounce skein were required, the mule cops might be spun $2\frac{1}{2}$ ounces in weight and the reel tender instructed to wind two cops on each skein; if a 1-ounce skein were required, a cop might be spun 2 ounces in weight and the reel tender instructed to make two skeins from each cop; or if a 2-ounce skein were required to be made from ring-spun yarn, the bobbins would be doffed from the spinning frame when 2 ounces of yarn had been wound on them, the correct point being predetermined by weighing bobbins of different sizes. This system, of course, is not absolutely accurate and does not produce skeins of absolutely the weight required, but it produces results sufficiently satisfactory for the general buyer of skeined yarns.

13. The terms **single** and **double reeling** refer to the number of ends passing to each skein at the reel; generally each skein contains only one end, so that almost all reeling is single reeling. Occasionally, however, the ends from two or more spindles or skewers are passed together through one guide eye and thence to the reel; this constitutes double

Digitized by Google

reeling. When two or more ends have been wound together on a spool or tube and then skeined, this also is called double reeling.

TYING

14. After yarn has been reeled on the swift and before it is removed it becomes necessary to tie together the first and last ends of the skein and in some cases to pass an additional piece of yarn around or through the various portions of the skein. This is known as **tying, or tying up.** As the object of skeining yarn is to prepare it for handling at some other process, very often a process in which the threads tend to become more or less entangled, such as bleaching, dyeing, etc., it is very necessary that when the yarn is used after such treatment there should be a ready means of finding the end so as to unwind the skein without entanglement. In some methods of tying, it is necessary to loop together several skeins, so that they may be handled together at the next process but readily separated before unwinding afterwards. When an extra piece of yarn is used to tie up skeins, it is generally a red-and-white cotton twist, or grandrelle yarn. Any colored yarn is suitable, preferably one dyed a fast color so as to stand bleaching, in which case it can readily be found after a skein has been bleached or otherwise treated. In some cases ordinary undyed coarse ply yarn is used, while in others two or more strands of single yarn, taken from a corresponding number of cops or bobbins, together with the ends of yarn in the skein, are tied around it.

In cross-reeling, the first end of the skein, which was slipped into the catch l_4, Fig. 2, before the reel was started, is removed and tied to the last end, either with or without a band of colored yarn passing around the skein, as in Fig. 7 (*a*). In case an extra piece of twine or band is not used, one end of the yarn is passed once or twice around the skein and then tied to the other end. Each skein is tied in the same way and the swift is then sometimes turned half way around and another band of colored or uncolored yarn tied loosely around the skein at the opposite side to that where the knot is.

Digitized by Google

Single cross-reeled yarn, when reeled to exact measurements, consists of 1 hank; in case of cotton, 840 yards would be reeled and then tied in. Double cross-reeled yarn consists of 2 hanks reeled one on top of the other before tying in, making, in case of cotton, 1,680 yards. Single cross-reel is sometimes indicated by the sign *X* and double cross-reel, by the sign *XX*. The words single and double, when used in connection with the word cross, have thus a different meaning than when used in the expressions single and double reeling.

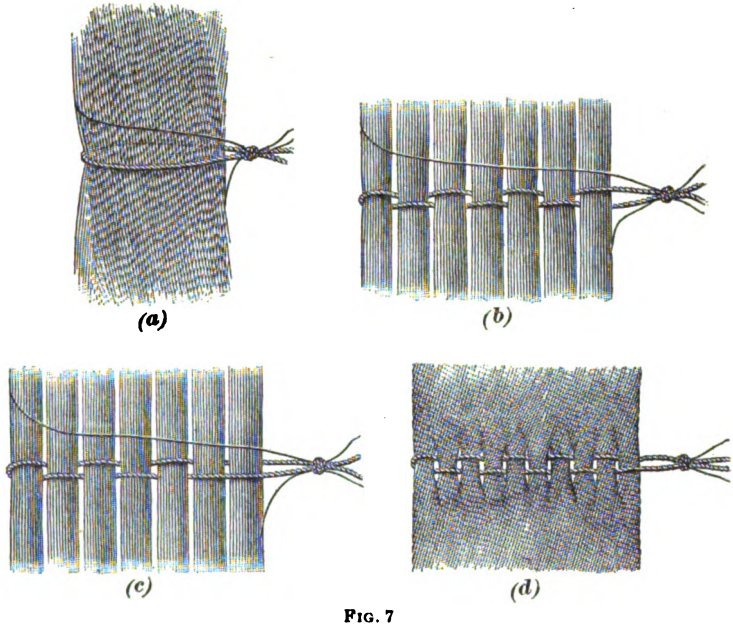

FIG. 7

For tying up yarn that is skeined in 7 leas, two methods are adopted—either 7-lea tying or 6-lea tying. In the *7-lea tying*, a piece of colored yarn is passed up between the first and second leas, down between the second and third, and so on until it encircles the seventh, when it is brought down between the seventh and sixth, and so on alternately until it is brought up between the first and second, as shown in Fig. 7 (*b*). The ends of the tie-yarn

Digitized by Google

are then knotted with the first and last ends of the skein yarn. In *6-lea tying*, the same method is adopted, except that the first and second leas are kept together within the same loop of the tie-yarn, thus making only 6 divisions instead of 7, as in Fig. 7 (*c*).

Grant-reeled yarn is tied by passing a piece of heavy ply yarn through the spaces produced by means of the system of crossing the ends on the swift in long-diamond form at two points, one on each side of the swift. This system of winding gives an opportunity of passing the tie-yarn through nine openings in the skein, thus making ten portions of yarn, divided from one another, as shown in Fig. 7 (*d*). Of course these are not separate sections of the skein, as in the case of 6- and 7-lea tying, for the ends crossing from one side of the skein to the other are tied in twice; the only object of this method of tying is to hold the yarn securely in position and prevent the threads becoming entangled in case of mercerization or some other process through which the yarn has to pass.

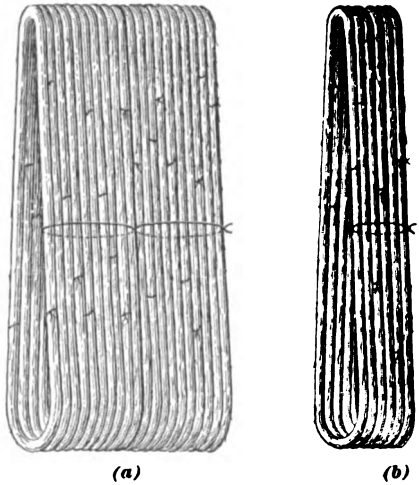

(*a*) (*b*)

FIG. 8

In French reeling the method of tying is somewhat similar to that used for cross-reeling and lea reeling, the difference between the French and the ordinary reeling being in the length of the skein rather than in the method of arranging and tying the yarn.

15. Banding.—After each individual skein has been tied, it is often necessary to band together several skeins. The arms of the swift are closed like a fan and the desired number of skeins slid together and banded with tie-yarn. A

Digitized by Google

common method is what is known as *banding in a figure 8*, because the tie-yarn follows the outline of an 8. Two groups, each containing 10 skeins, are arranged on the swift and a piece of tie-yarn passed alternately down and up and then tied, as shown in Fig. 8 (*a*). This holds the 20 skeins together during the succeeding processes and provides for their separation without entanglement by snapping the band. The number of skeins to a group varies; for instance, in some cases only 6 skeins are tied together by means of a band, which in this case is usually an open one that encircles the entire 6 skeins, as shown in Fig. 8 (*b*). When a number of skeins are fastened together by this or any other system of banding, the group is called a *knot*.

SPECIAL MOTIONS

16. Measuring and Traverse Motion. — In many cases, reels intended for ordinary cross-reeling are not fitted with measuring motions, since it is customary to place in the creel a number of bobbins or cops that have all been doffed at one time from the spinning machine and that consequently contain the same length of yarn. The reel is operated until the cops or bobbins are either entirely or almost entirely exhausted, so that each skein contains approximately the same length of yarn. In the case of lea or grain reeling, however, it is necessary to adopt measuring motions that will move the traverse guide after the correct length has been reeled and also stop the machine when the total amount of yarn desired has been wound on the swift. For this, the rods q_4, r_4, and lever r, shown in Fig. 6, are removed, and in place of them is used a vertical rack t, Fig. 9, having at its upper end six steps. By means of a spring p_1, a small bowl p_2 fixed on a pin at the end of the traverse guide rod p is kept constantly pressed against whichever one of the steps happens to be in line with it. The six steps and the face of t below the steps provide seven faces against which p_2 may rest. At the opposite side of the rack a series of seven teeth t_1 are cast, and by means of a dog k_2 attached to a worm-gear k_4 containing 80 teeth (in the case of 7-lea

Digitized by Google

reeling), which is driven from a single-threaded worm k_3 on the swift shaft k, the rack t is raised 1 tooth every time that the swift makes 80 revolutions. Each time that the rack is moved up 1 tooth, it is raised a sufficient distance to allow the bowl p_3 to come in contact with the face of the next step of the rack, thus allowing the traverse rod p to be

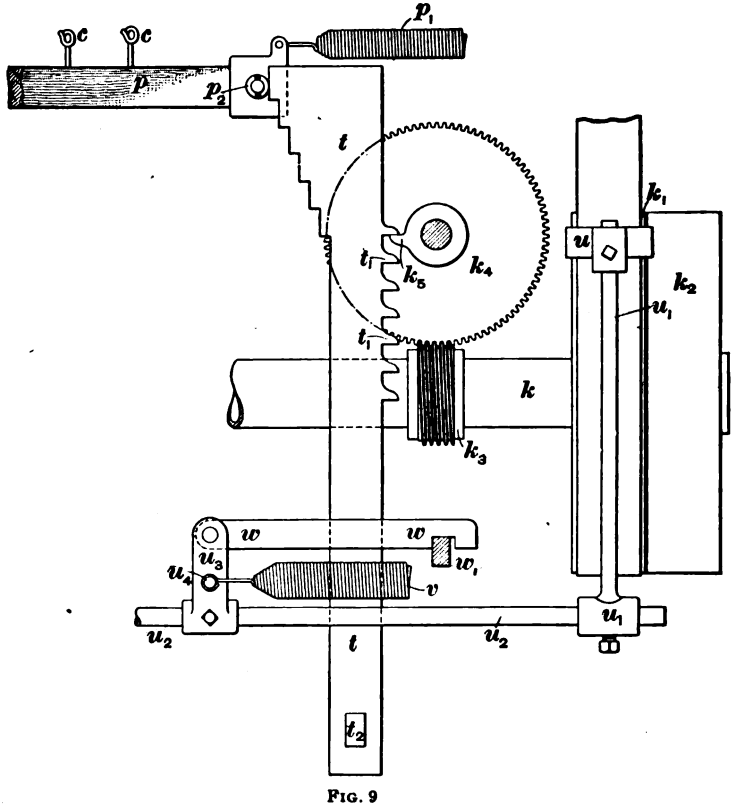

FIG. 9

drawn a short distance nearer the driving end of the reel, which guides the yarn on to a new portion of the swift and gives the lea reeling shown in Fig. 7 (*b*) and (*c*).

In English skeining, or grain reeling, other than 7-lea, the required traverse is given to the rod p by varying the number of teeth in the gear k_4 so that it will have made

Digitized by Google

one revolution, and the dog k_4 will consequently raise the rack t 1 tooth, when the required length of yarn has been wound on the swift.

17. Stop-Motions.—The belt fork u, Fig. 9, is attached to a vertical rod u_1, which is mounted on a horizontal rod u_2 so arranged that it may slide in suitable bearings and thus move the driving belt from the tight pulley k_1 to the loose pulley k_2, or vice versa. A bracket u_3 is setscrewed to the rod u_2 and carries a pin u_4 to which is attached the coil spring v, which is fastened at its other end to a stationary part of the frame and constantly tends to draw the bracket u_3, together with the belt fork and its connections, toward the loose pulley. Above this spring and also attached to the bracket u_3 is a latch w with a notch at its outer end. When the reel is started, the rod carrying the belt fork is moved far enough along to bring the belt on to the tight pulley and at the same time allow the latch w to drop slightly so that the notch is held against the projection w_1. When the total number of yards required for 1 skein has been wound on the swift, the rack t will have risen a sufficient distance to enable the projection t_2 to raise the latch w, and allow the spring v to ship the belt to the loose pulley.

Such an arrangement as this is usually applied only in Europe, in case of lea and skein, or grain, reeling, where accurate measurements are required. For ordinary American cross-reeling, where exact measurements are of less importance, reels are often provided with a simple measuring motion consisting of an arrangement by which a gong is struck when the desired length of yarn has passed on the swift, leaving it for the attendant to stop the machine; or they may have in addition to the measuring motion a simply constructed stop-motion to automatically stop the machine.

DOFFING

18. When the proper amount of yarn necessary to form the skeins has been wound on the swift, and when the necessary tying of the skeins and the ends of the yarn has been

Digitized by Google

performed, it becomes necessary to remove the full skeins; this operation is known as **doffing;** in order to accomplish it, the arms of the swift must be brought together. In Fig. 5 (*a*), the swift is shown with the rails spread in working position and held apart by the extended leather strap *m* and the steel latch *n*, while in Fig. 5 (*b*) it is shown in a folded position, with the latch *n* released, the strap loose, and the rails brought together, with the arms in a folded position. In order to close the swift, the latch *n* is slipped from under the spring that holds it when working and turned so that it lies along the rail l_2; the rails l_3, l_4 are then pulled together and both brought in close proximity to the rail l_2. Consequently, the rails l_1, l, l_5, since they are attached, respectively, to the opposite ends of the arms to which the rails l_2, l_3, l_4 are attached, are also brought close together, thus reducing the distance around the swift and allowing the skeins to rest loosely on it. If the skeins are to be banded, it is done when they are in this position, and sometimes the simpler methods of tying, such as those for cross-reeling, are performed with the skeins hanging loose.

The doffing process is then begun by moving the skeins to the doffing end. As the swift consists of one continuous framework, resting in bearings at each end and encircled by the completed skeins, it becomes necessary to in some way pass one part of the skein over the end of the swift and its bearings. Formerly it was the custom to lift the end of the swift completely out of its support, slip the skeins over the end of the swift and its shaft, and then drop the swift back into position. This was a heavy task for the reelers, who are usually women or girls, and also tended to cause oil stains on the skeins by their coming in contact with the bearing of the reel; consequently, devices are now employed by which one part of the skein can be laid in a suitable recess and passed under the bearing of the swift without raising it.

One style of these doffing devices, shown in Fig. 4, consists of a grooved segment wheel *s* that forms a bearing for one end of the swift shaft *k*. The wheel *s* is supported on four small rollers in the bracket s_1, which is attached to the

Digitized by Google

end sampson h, the hub of the wheel forming a bearing for the shaft k. The wheel contains three spokes, the central one carrying a handle s_1 that is used to turn the wheel around when doffing, which is the only time that it is necessary to change the position of the wheel from that shown in Fig. 4. A long portion of the rim of the wheel extends beyond the spoke s_3. When it is necessary to remove a skein from the arms of the swift, the skein is first passed over that part of the rim that projects beyond the spoke s_3, and the wheel then

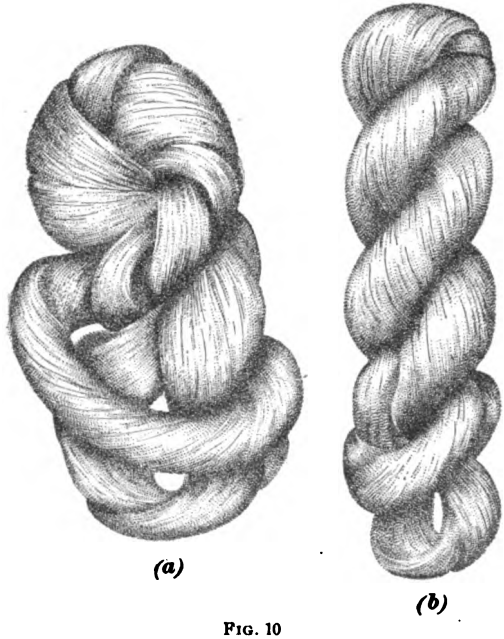

FIG. 10

revolved. In this manner the skein will be detached from the swift. Usually several skeins are removed at one operation.

After all the skeins have been removed from the swift, the rails are spread to their proper positions and the arms fastened by sliding the latch n into the recess provided for it under the spring. The broken ends of yarn hanging from the guide wires are attached to the catches l_4, Fig. 4, after which the reel is ready to be started again to form another set of skeins.

Digitized by Google

KNOTTING

19. After the skeins are doffed, it is necessary to twist them into some form in which they can be handled without damaging the ends or running the risk of entangling them. This is known as **knotting.** They are very loosely knotted by holding opposite ends of the skein in each hand, twisting it several times, and then passing one end through the loop in the other end, so as to form a loose knot such as is shown in Fig. 10 (*a*). A tightly twisted skein is formed by performing the same operation more carefully; in this case one end of the skein is passed over a curved hook securely attached to a bench and the opposite end of the skein twisted many times. It is then doubled near its center, in which case the excess twist that has been placed in the twisted skein causes the doubled part to twist around itself, as shown in Fig. 10 (*b*). One end of the skein is passed through the loop formed by the other end, when it is ready for bundling or packing otherwise for transportation.

VARIATIONS IN CONSTRUCTION

20. The reel that has been described is one that is constructed in the simplest manner. Other constructions of reels are supplied by different builders, the principal points of variation from the style described being in the form of the swift used, the methods of opening and closing the swift, the arrangements for doffing, for imparting a traverse to the yarn, for measuring the length of yarn reeled and stopping the machine, and in the weight and strength of the framework supporting the operative portions of the reel. The reel that has been described is known as a *single reel*. *Double reels* are sometimes constructed, in which case there are two swifts, one on each side of the frame. This resembles two single reels placed back to back; otherwise the construction and operation is the same as in the case of a single reel. There is no especial advantage in this style of construction except a slight saving in floor space and a greater solidity of the machine.

Digitized by Google

Still another form of construction provides for four swifts to each reel. This construction is similar to that of the double reel except that there are two short swifts on each side instead of one long one, both, of course, being in line and each having a bearing near the center of the frame. The driving is performed by means of clutch gearing situated at the center. This construction is sometimes used where children are employed for reeling, who are only competent to tend a small number of ends, or where long skeins are reeled, since this gives an opportunity for the tender to doff one swift while the others are running.

Other styles of reels are those for double reeling and for slack-reeled skeins. For double reeling, the arrangement of the creel provides for its holding more than one cop or bobbin for each guide wire; in other respects the construction and operation of the reel is the same.

Reels adopted for *slack reeling* are required to produce a skein in which not only are two or more ends reeled together, but a slight amount of twist also inserted, as, for example, twenty turns per foot of reeled yarn. In this arrangement, the yarn is usually reeled from cops or more commonly ring-spinning bobbins; the creel is constructed with two or more spindles mounted in a casting, which in turn is mounted on a vertical spindle resting in bearings and capable of being revolved. Immediately beneath the creel is a horizontal shaft extending the whole length of the frame and carrying bevel gears that gear into smaller bevel gears attached to the vertical spindles. The long spindle shaft is driven from one end of the reel and rotates the castings carrying vertical creel spindles; consequently, at the same time that the yarn is being drawn from the cops or bobbins, each group of cops or bobbins is also being revolved, thus imparting a small amount of twist to the yarn passing on to the swift of the reel. In other respects the construction of the reel and its operation is the same as the common single reel. The expression **slack reeling** is an abbreviation of slack-twisted reeling.

Digitized by Google

CALCULATIONS

21. Production.—Reels are stopped for a large portion of the time, from 35 to 75 per cent. of the time being occupied in doffing, piecing, and creeling. The least loss of time occurs in reeling fine yarns and making long skeins, but the coarser the yarn or the shorter the length of skein, the greater is the loss of time for doffing, since the skein is completed so much more quickly in the case of coarse yarns, as there is less length on the bobbins, or in the case of reeling from small cops or bobbins. In such cases, the time occupied in replacing the supply of yarn in the creel is greater than when reeling fine yarns or reeling from cones or cheeses. The skill or industry of the tender also affects the allowance to be made for loss of production.

22. Before the production of a reel can be ascertained it is necessary to find the number of revolutions per minute of the swift, and also its circumference. Example 1 illustrates how the speed of the swift is calculated; the circumference of the swift is ascertained by measuring.

EXAMPLE 1.—Find the revolutions per minute of the swift when the countershaft makes 250 revolutions per minute and carries a 6-inch pulley driving a 12-inch pulley on the shaft of the swift.

SOLUTION.— $\frac{250 \times 6}{12} = 125$ rev. per. min. of the swift. Ans.

EXAMPLE 2.—Find the length of time consumed in winding one set of skeins that are 840 yards long, if the swift makes 125 revolutions per minute and is 54 inches in circumference.

SOLUTION.— $\frac{840 \times 36}{54 \times 125} = 4.48$ min. Ans.

To find the production, in pounds per spindle, for a given time, when the circumference of the swift, the revolutions per minute, the counts of the yarn, and the allowance for stoppages are given:

Rule.—*Divide the product of the number of revolutions per minute of the swift, its circumference in inches, 60 (the minutes in an hour), and the hours run, by the product of 36 (the inches in a yard), the yards in a hank, and the counts of the yarn being*

Digitized by Google

reeled; this gives the production in pounds supposing the reel to be running constantly. To find the actual production, multiply the calculated production by the percentage of time during which the reel is running.

EXAMPLE 3.—Find the number of pounds of yarn delivered per spindle per day of 10 hours when reeling No. 10s yarn in 54-inch skeins on a swift making 125 revolutions per minute, assuming that 55 per cent. of time is lost.

SOLUTION.— $\frac{125 \times 54 \times 60 \times 10}{36 \times 840 \times 10} = 13.392$ lb. per spindle per day; 100 per cent. − 55 per cent. = 45 per cent., time run; $.45 \times 13.392 = 6.026$ lb. Ans.

EXAMPLE 4.—Find the production of a reel per day if it contains 50 spindles and produces 6.026 pounds per spindle per day.

SOLUTION.— $50 \times 6.026 = 301.3$ lb. per day. Ans.

23. The length of reels depends on the number and gauge of the spindles and may be determined by multiplying the number of spindles by the gauge and adding 27 inches for the extra length occupied by the head end and foot-end. Thus, a 50-spindle reel with a $2\frac{3}{4}$-inch gauge occupies $(50 \times 2\frac{3}{4}) + 27$ inches, which equals $164\frac{1}{2}$ inches, or 13 feet $8\frac{1}{2}$ inches.

Reels are made in various sizes from 30 to 60 spindles, the common size containing 50 spindles; the gauge may be either $2\frac{3}{4}$, 3, $3\frac{1}{4}$, $3\frac{1}{2}$, $3\frac{3}{4}$, or 4 inches.

The width of the reel depends on whether it is single or double and also on the size of the swift—whether it is intended to make 54-, 60-, 72-, or 90-inch skeins. A 50-spindle reel with a $2\frac{3}{4}$-inch gauge and adapted to make skeins of as great a circumference as 72 inches, is 28 inches in width. This, of course, does not provide for the space to be allowed for passages between the reels.

From five to eight reels are estimated to require 1 horse-power, according to their size.

MANAGEMENT

24. Although a reel is simple in construction and has but few mechanical motions, it is necessary to see that it receives careful and periodical oiling and cleaning, and especially

Digitized by Google

that this is so performed as to prevent stains on the yarn. The doffing device, swift rails, and creel should be kept clean, in order to prevent the production of dirty skeins. The spindle bases, in case the creel is equipped with revolving spindles, should be cleaned out once a year, and the friction should be properly adjusted at all times in order to insure proper winding.

The tenders should be supervised so as to see that when an end breaks down or runs out it is immediately replaced and pieced up, each knot being carefully tied as small as possible without projecting ends, and not merely replaced in the mass of yarn forming the skein without being tied.

Where the swifts are adjustable in size, as is the usual custom, the circumference of the swift should be measured from time to time to insure the proper size of skein being made and guard against any wilful or accidental change in length of the arms. Waste should be reduced as much as possible at all times, especially in reeling from cops, so as to insure the whole of the yarn, as far as possible, being unwound from the cop tube or cop bottom. Great care should be exercised in tying, banding, doffing, and knotting skeins so that this may be done in accordance with the requirements of the purchaser of the yarn.

BUNDLING AND BALING REELED YARNS

25. When in the form of skeins, yarn is in a suitable state to be packed for transportation without much risk of damage. The yarn is so arranged that it may either be packed loosely in bags or subjected to considerable pressure in bales, in order to compress it into the smallest possible space, with the thread of yarn arranged in such a way and the skein so tied up and banded that after the bale is opened the yarn will not be found to have suffered from the pressure to which it has been subjected. As the skein is a suitable form to withstand such compression, yarn is consequently often reeled merely for the convenience of transit when it has to be transported long distances, especially if by ocean transit.

Digitized by Google

Three methods of packing skeins are in common use: (1) soft bales, or loose packing in bags; (2) pressed bales subjected to moderate pressure; (3) bundling, succeeded by compressed baling under intense pressure.

SOFT BALES

26. Skeined yarn is commonly packed loosely in bags when it has to be transported by land and not to any great distance. A bag of burlap is made of the required dimensions with a sheet of paper sewed in with the burlap so as to form a lining. The method of packing the yarn is to suspend this bag with the mouth open, from two rods, each having a hook at each end, so as to hold the mouth of the bag open in rectangular form. The skeins loosely knotted, as shown in Fig. 10 (*a*), are thrown into the bag and tramped down until the bag is full, when the mouth is sewed up. The soft or hand-formed bale is preferred to the compressed bale by some purchasers of yarn, because it may be more readily opened. A common size of these soft bags of yarn is from 250 to 300 pounds in weight, $4\frac{1}{2}$ feet in length, $3\frac{1}{2}$ feet in width, and $2\frac{1}{2}$ feet in thickness.

PRESSED BALES

CONSTRUCTION OF BALING PRESS

27. Where yarn has to be transported a considerable distance, either by rail or water, for domestic trade, it is more commonly put up in pressed bales. Fig. 11 is a view of a baling press known as a *togglejoint power press.* The box *a*, in which the skeins are placed while being pressed, is constructed of hardwood and is firmly held together by means of heavy iron ribs on its outer side. The box can be opened or closed when necessary by releasing the eccentric handles a_1, Fig. 11, and a_1, a_2, Fig. 12. Fig. 12 shows the box open after a bale has been removed. The framework of the press is composed of the bed *b*, Fig. 11, and the head *c*, both

Digitized by Google

of which may be made of either cast iron or wood. The upright rods or columns *d* are usually made of steel and serve to connect the bed *b* with the head *c*. Running horizontally across the machine below the head and between the columns is the screw *e*, which imparts motion to the working arms f, f_1, f_2, f_3. This screw has a right- and a left-hand thread

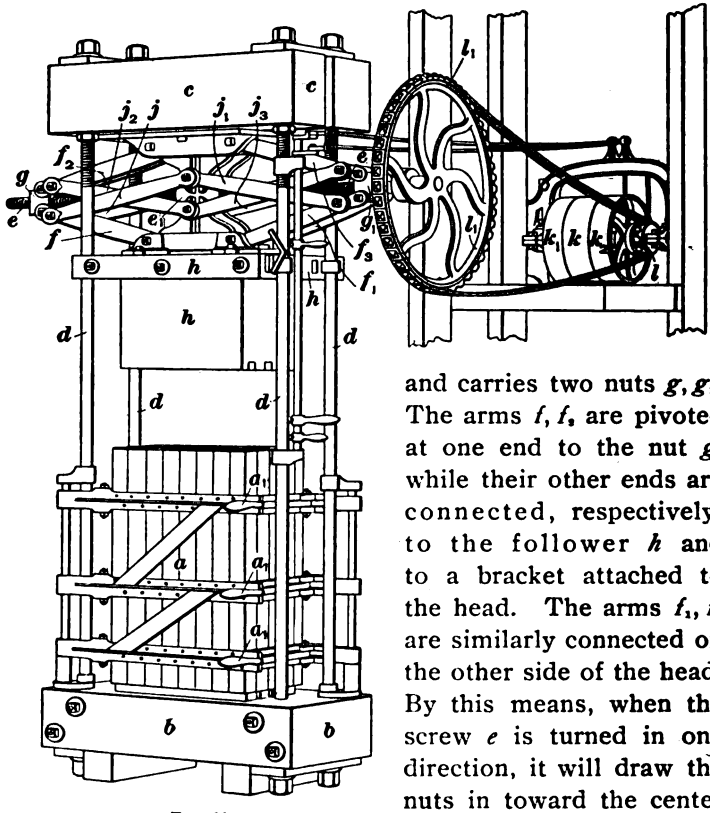

FIG. 11

and carries two nuts g, g_1. The arms f, f_3 are pivoted at one end to the nut *g*, while their other ends are connected, respectively, to the follower *h* and to a bracket attached to the head. The arms f_1, f_2 are similarly connected on the other side of the head. By this means, when the screw *e* is turned in one direction, it will draw the nuts in toward the center of the screw, straighten out the working arms, and force down the follower *h*. When the screw is turned in the opposite direction, it will draw the nuts out, cause the arms to fold up, and thus raise the follower. The arms j, j_1, j_2, j_3 serve merely to steady the working parts. The bed and follower are constructed with

Digitized by Google

recesses through which cords may be passed while the yarn is under pressure and secured before pressure is released.

28. An automatic power attachment is used in connection with the press and consists of a bracket and short shaft carrying three pulleys—k, which is attached to the shaft, and k_1, k_2, which are loose on the shaft. The bracket also carries two rods, with belt shippers, springs, and lever attachment for shipping the belts from one pulley to another. One loose pulley is driven by a crossed belt, while the other is driven by an open one and consequently revolves in the opposite direction. On the shaft with the pulleys is a small sprocket gear l that drives by means of a chain a large sprocket

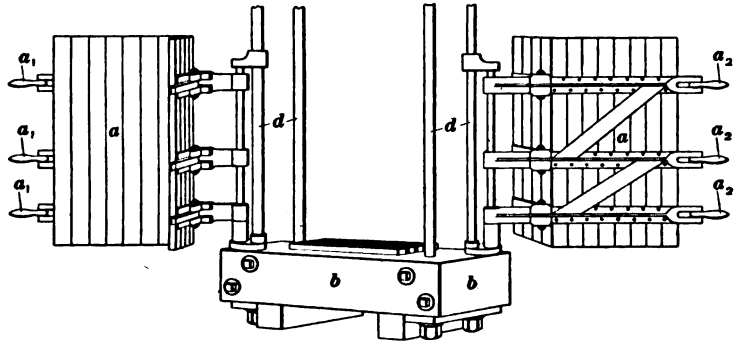

FIG. 12

gear l_1 on the same shaft as the screw e. In operation, one belt is first shifted to the tight pulley, which turns the screw in such a direction that the follower is forced downwards until the yarn has been compressed sufficiently, when the belt is automatically shipped to its loose pulley. After the bale has been secured with cords, the other belt is shipped from its loose pulley to the tight pulley, which reverses the screw and raises the follower.

Before closing the box prior to inserting the yarn, the required number of pieces of cord of sufficient length to pass around the entire bale are placed in position in the grooves in the bed. A piece of burlap of sufficient size to cover the lower side of the bale and half of the surrounding four sides

Digitized by Google

is placed in position on top of the bed and covered with paper, after which the box is closed and fastened. The required amount of yarn is deposited in the box and the top covered with paper and a piece of burlap similar to the first piece, after which the follower is allowed to descend and subject the yarn to the necessary pressure to produce a bale of the desired size. The box is then opened and the edges of the two pieces of burlap sewed together so as to cover the bale completely, when it is ready for tying. The cords are passed upwards and drawn through their respective grooves in the follower by means of a hook, after which they are tied tightly around the bale. The follower is allowed to rise so that the bale can be removed and marked, with a stencil or otherwise, indicating the necessary shipping marks and information as to contents of the bale, after which it is ready for shipment. Other methods are in use for covering the bale, but they are all similar to a certain extent to the one described.

The press described, which is the style commonly in use, forms a bale 24 inches long, 20 inches deep, and 24 inches high, weighing from 220 to 270 pounds. It is one of the smallest styles of yarn baling presses in general use. When the follower is in the highest position, the distance between it and the bed of the press is 44 inches. This is spoken of as the *daylight space*, or *piling space*. It is not possible, nor necessary, to bring the follower down to the bed of the press, the exact distance of its movement varying from 20 to 24 inches, this being adjustable according to the position at which the knock-off is set. For example, if the knock-off is set so that the follower has a total downward movement of 21 inches, yarn may be piled in the box to a height of almost 44 inches and reduced by pressure to a height of 23 inches. The pressure capable of being exerted by the follower of this press in compressing the yarn is 70 tons. Yarn bales are made in various sizes, according to the custom of the mill, the requirements of the buyer, and the size of the press. The baling presses are made in many styles and sizes, some of them being considerably larger than the one described, both in length and width of the box,

Digitized by Google

in the distance through which it is possible for the follower to move, in the height of the bale that is made, and in the amount of pressure that can be exerted. A better grade of press is also made, constructed entirely of iron and steel, but the general principles of its construction and operation are the same as already described.

BUNDLES

CONSTRUCTION OF BUNDLING PRESS

29. When yarn is sold in skeins for export, especially when it has to be transported long distances by sea, as for instance to India, China, and Japan, it is customary first to put up the yarn in small bundles of either 5 or 10 pounds in weight, more commonly 10 pounds. A number of these bundles are then packed into bales of from 300 to 600 pounds in weight by means of a heavy baling press. It is customary in foreign countries to sell this yarn to retail customers, in 5- or 10-pound lots, which is the reason for first making up the yarn in bundles.

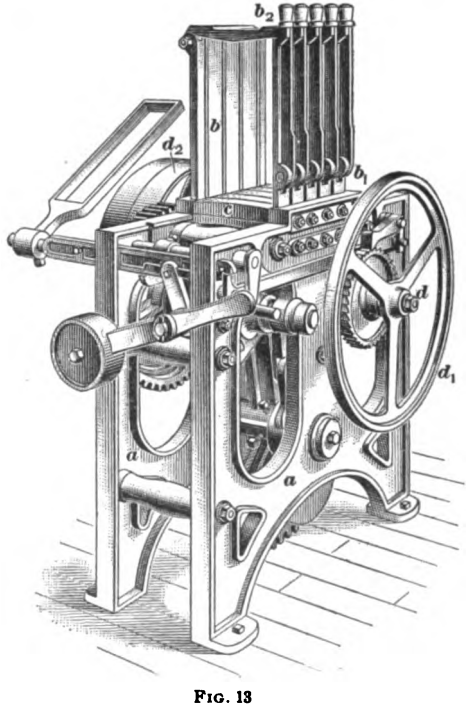

FIG. 13

The machine used for putting up the skeins in these small 5- or 10-pound bundles is known as a **bundling press.** A common type of these machines is shown in Fig. 13 and consists of a

Digitized by Google

framework *a* that supports the required mechanism for forming the bundle. Securely attached to the upper part of this framework are two sets of vertical bars b, b_1, which form the sides of an open-ended box for holding the yarn. Each set consists of five individual bars, the inner surface of which is polished. The bars are a slight distance apart, so that a piece of twine can be passed between them for tying up the bundle. The top of the box for holding the yarn is formed by a set of five short horizontal bars b_2. These bars are hinged at one end to the vertical bars of the set b, while the other ends terminate in slots. Near the lower end of each bar in the set b_1 is hinged a lever that extends upwards and terminates in a handle; these levers serve to lock the horizontal bars b_2 firmly in position while the yarn is being subjected to the pressure of the follower *c*.

The follower in this case, as in most bundling presses, forms the bottom of the yarn box and is raised in order to subject the yarn to the required pressure to produce a bundle of the desired size. This is accomplished by suitable mechanism driven from the shaft *d*, which can be operated by power or hand. When the machine is driven by hand, the required motion is obtained by turning the hand wheel d_1, and when it is operated by power it is driven from the tight pulley d_2, which is attached to the shaft *d*.

30. When it is desired to form a bundle, the follower should be in its lowest position, as shown in Fig. 13; four pieces of twine are then dropped between the vertical bars so that they rest on the upper surface of the follower. On these pieces of twine a piece of heavy paper board, known as a *back*, is placed, and on this back are arranged layers of skeins, which have been knotted as shown in Fig. 10 (*b*), the number of skeins used depending on the size or weight of the bundle required; for example, for a 10-pound bundle of 40s yarn, 40 skeins each containing 10 hanks, or 8,400 yards in the case of cotton, would be used. After the required number of skeins have been properly arranged in the yarn box, another back is placed on top of the yarn and the horizontal

Digitized by Google

bars b, turned down and locked in position, by means of the vertical levers attached to the vertical bars b_1; the machine is then started, which raises the follower and compresses the yarn. When the bundle has been reduced to the required size the machine is stopped, the twine drawn tightly around the bundle, between the bars, and the ends of each piece tied together in a square knot. The follower is then lowered, the horizontal bars unlocked and turned back, and the bundle removed, wrapped in wrapping paper, and tied again with twine.

In some cases before the upper *back* is placed in position, a piece of tissue paper a little longer than the yarn box and about the width of it is inserted, which thus hangs down over the ends of the skeins. In certain cases, for foreign trade with India, China, etc., the backs, tissue paper, twine, wrapping paper, etc., must be of specific colors, in order to comply with the demands of the trade in these countries.

BALING

31. When the yarn has been made into bundles, they are shipped to the merchant who prepares them for export in compressed bales. This is done by placing a number of these bundles, from 25 upwards, between the platforms of a very powerful baling press, in which they are compressed between sheets of burlap lined with tarred paper and secured by a number of broad iron bands riveted or buckled around the bale. The ends of the burlap are neatly folded and sewed up, and the bale marked with the necessary shipping marks. By this means the yarn is compressed into very small space, which is desirable for ocean freight; the tarred paper prevents damage from moisture during transit.

Digitized by Google

Digitized by Google

WINDING

TUBE WINDING

INTRODUCTION

1. In the textile industries, yarns are wound, for various purposes, in forms and on machines that differ according to the object desired. A form of winding that of late years has assumed considerable importance and appears to be on the increase is that of winding yarn, thread, and twine on wooden or paper tubes (generally the latter) either of the cylindrical or conical type. The word parallel is used in the textile trades for cylindrical when applied to such tubes. A parallel tube containing yarn is generally spoken of as a *tube*, but sometimes as a *cheese*, while a conical tube filled with yarn is generally called a *cone*, although in some places both the parallel and conical tubes are spoken of as cheeses. The process of winding that produces parallel or conical tubes is spoken of as *tube winding* or *cone winding*, respectively. Owing to the method of guiding the yarn to the tube by means of a rapid traversing motion, which causes the yarn to cross the path of yarn previously wound on the tube, still other names are applied to this method of winding; for example, *cross-winding* and *quick-traverse winding*. From the fact that the yarn is wound by means of contact with a revolving drum, it is sometimes called quick-traverse drum winding, but this name is unsuitable and tends to confuse the process with the ordinary method of drum winding on a double-headed spool, for which machine the name of drum winder should be reserved. Throughout this Section the name tube

For notice of copyright, see page immediately following the title page

Digitized by Google

winding will be used and should be understood to cover the process of winding yarn, in any machine, on either a parallel or conical tube without heads or flanges.

2. Yarn may be wound on tube winders from either cops, bobbins, skeins, spools, or, sometimes, cheeses. In cases where single yarn that is in the form of a cop or spinning bobbin, ply yarn that is on a twister bobbin, or yarn that has been bleached, dyed, or mercerized and remains in skein form has to be sold and transported a considerable distance, the tube winder is very useful. It is especially advantageous when the yarn has to be used afterwards at a machine or process where it is convenient to take it from a fixed creel or framework capable of holding a considerable supply of yarn. For example, at many knitting machines it is convenient to take a number of ends of yarn from a creel or stand, and the longer the supply of yarn lasts, the better; in such cases the conical-tube formation is frequently used. In some forms of sewing, seaming, edging, or covering machines, it is possible to take the thread from a tube on a fixed stand, as is also the case in the use of twine and small cords; and in these cases also the conical tubes are often used. The parallel-tube form is especially suitable for winding yarn intended for warps, and which is to be transported a considerable distance, since the ends can be warped directly from the parallel tubes placed in an ordinary warper creel, thus saving the transportation and return of wooden warper spools, which is expensive and inconvenient. The largest use of tube winders is for making cones of knitting yarns.

Another object in the use of a tube winder is to perform the duty of a doubler winder. Tube winders are so constructed that one end only may be wound on a tube or, when desired, two or more ends may be wound together side by side, the operation of course being simply one of winding; the ends are not twisted together at this process. The objects of this machine may therefore be said to be: (1) to wind a considerable length of yarn on a tube in such a form that it may be handled without being damaged and unwound

Digitized by Google

easily at the succeeding process; (2) to wind a number of ends together on one tube and at an even tension, in order to prevent corkscrewing or imperfections when twisting these ends together to form a thread or a ply yarn. Large quantities of yarn intended for covering electric wire are wound in this manner.

3. The principle on which the tube winder is constructed and operated is to give to the end or ends being conducted to the tube a rapid reciprocating traverse motion, so that the end of yarn is first carried from one side of the tube to the other and then rapidly reversed and carried back again. By this means one layer of yarn serves to bind the preceding layers, and as the end of yarn is only allowed the briefest possible dwell at each side of the tube, only a small portion of its length remains at the side at each traverse; therefore, the yarn that forms the edges of the tube is held firmly by the succeeding layers, and thus at each side of the tube firm ends are produced, which allow transportation or handling without the yarn becoming entangled at the ends. By this means, a structure of yarn is built up without the use of heads or flanges at the ends of the tube, and at the same time it will satisfactorily unwind at the next process. Tube winding thus differs in two essential features from the older form of winding yarn in parallel coils by means of a slow traverse along the surface of a double-headed wooden spool, either mounted on a vertical spindle, as in case of a spooler, or resting on a drum, as in case of a drum spool winder.

QUICK-TRAVERSE DRUM WINDERS

4. All types of tube winders have many features in common. The object and result in each case is practically the same, the differences being chiefly in the methods of imparting the traverse to the yarn and in the detailed construction of the machine in the matter of stop-motions, etc. In a large number of machines, the yarn is wound on the tube by contact with a revolving drum; while in another style, the yarn is guided along the surface of a tube

Digitized by Google

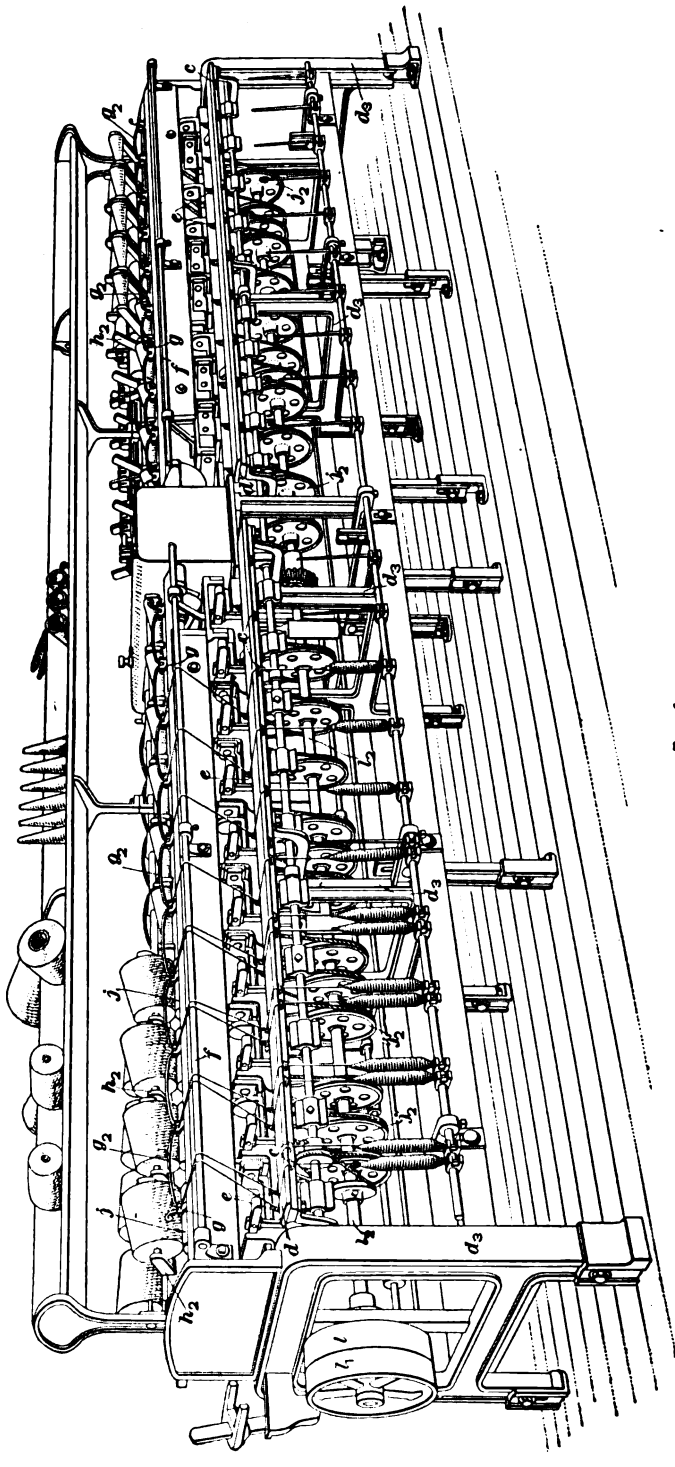

FIG. 1

Digitized by Google

Digitized by Google

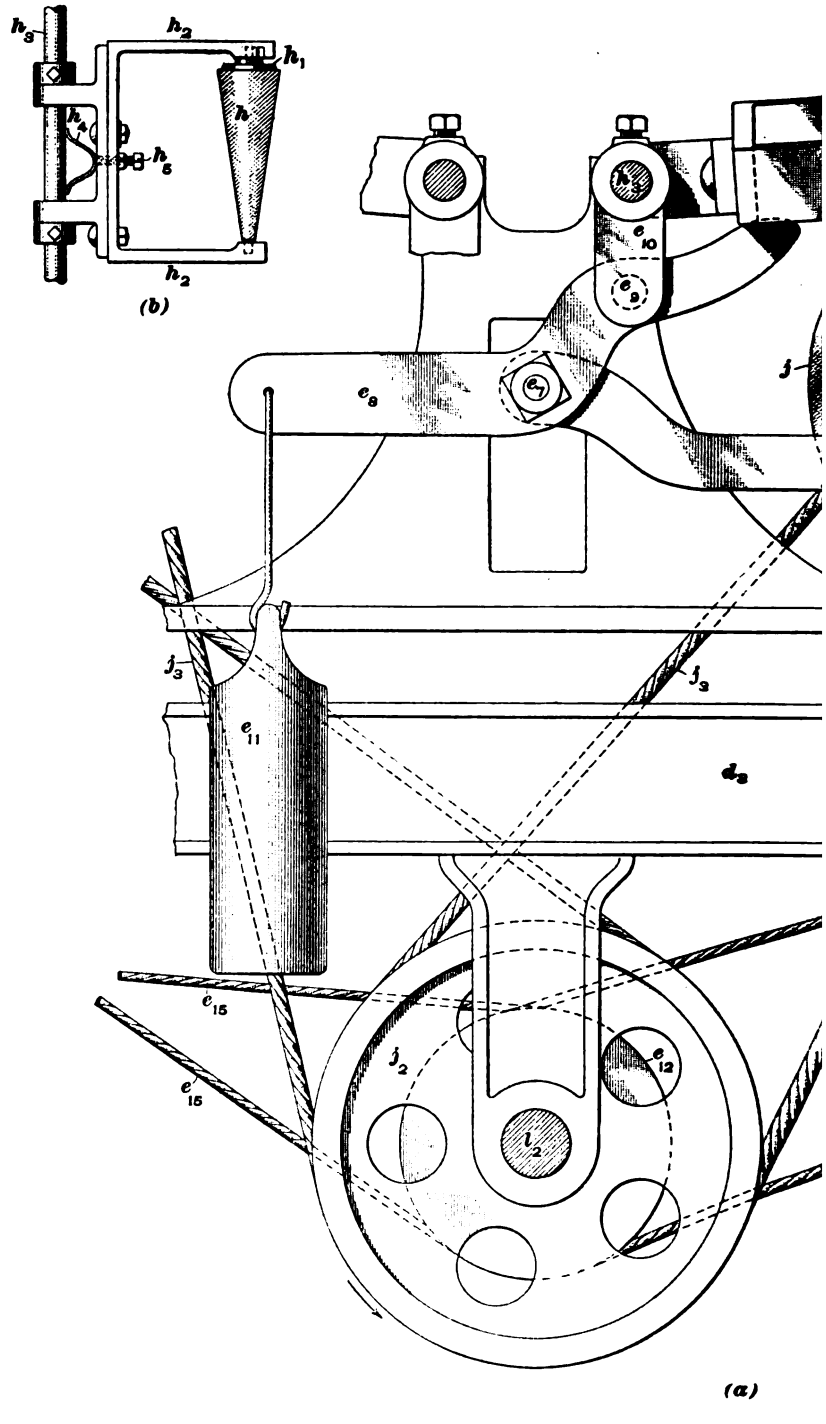

Digitized by Google

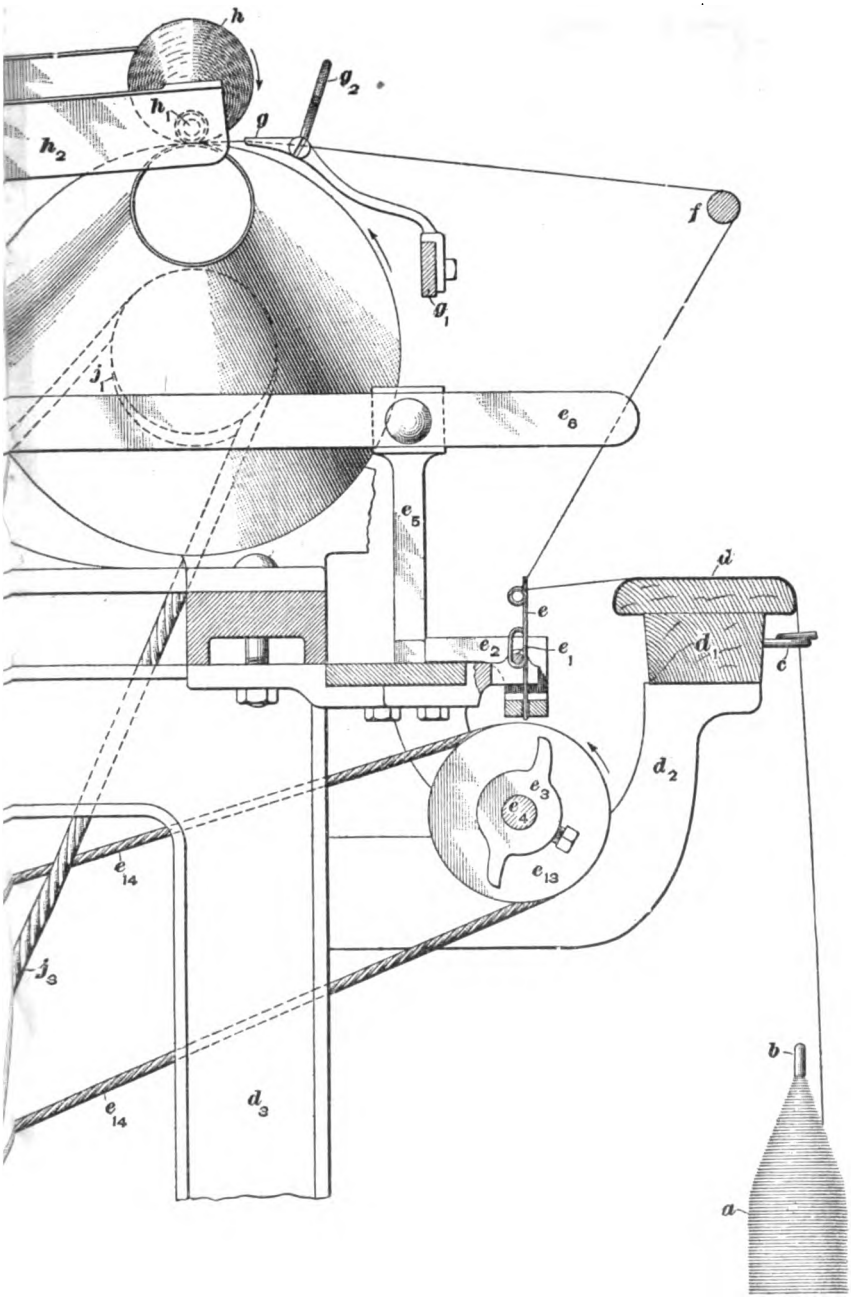

FIG. 2

2 93

Digitized by Google

Digitized by Google

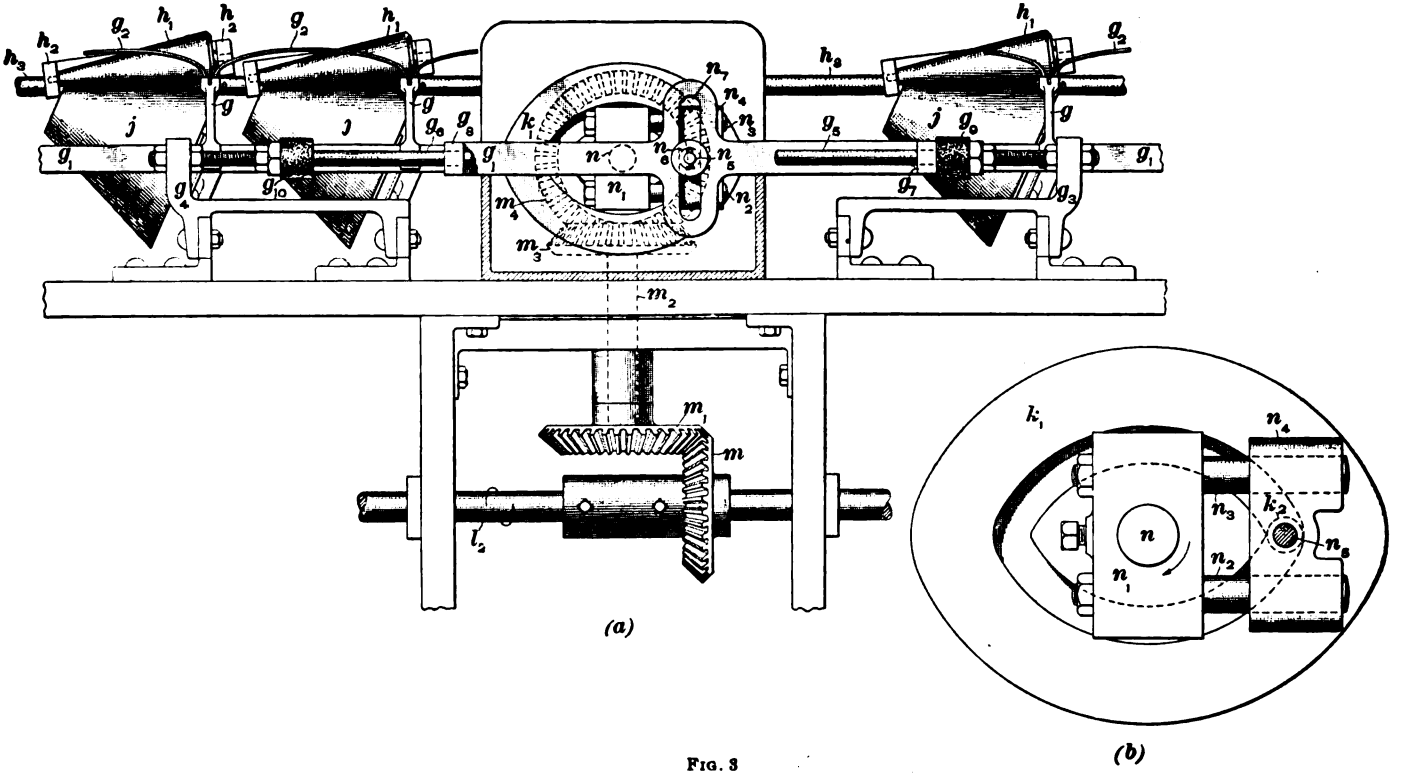

FIG. 3

Digitized by Google

mounted on a revolving spindle; the latter is known as the *Universal system*.

One form of tube winder in which the winding is performed by means of contact with a revolving drum and which possesses all the typical features of a quick-traverse cross-winding frame is shown in Fig. 1. A section through

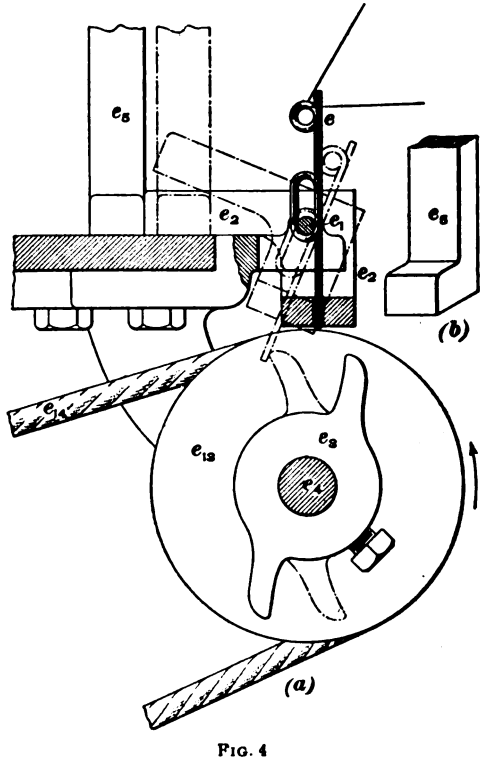

FIG. 4

a portion of the frame is shown in Fig. 2 (*a*); the mechanism for producing the traverse in Fig. 3 (*a*) and (*b*); and the stop-motion and connected parts, in Fig. 4. A plan of the driving of the drums and the knock-off dog-shafts is also shown in Fig. 6. The same reference letters apply to the same parts when represented in different figures, and in considering the construction of the machine it is advisable to

Digitized by Google

refer to the parts as represented in each of the drawings in which they are shown.

5. Passage of the Yarn.—The material being wound passes from the creel, which is shown in Fig. 2 (*a*) as holding a cop, through the first wire-guide eye *c*, over and into contact with the tension board *d*, through the upper eye of the stop-motion wire *e*, around the guide rod *f*, and thence through a slot in the traverse guide *g* to the tube *h*, on which it is wound and which rests on the winding drum *j*. The arrangement for the passage of the stock is the same at each drum along both sides of the machine, for quick-traverse tube winders are constructed with the two sides of the frame alike so as to economize in floor space and the cost of construction of the machine.

6. The **creel,** shown in Fig. 1, consists of a round rod to which are setscrewed footsteps carrying skewers, or spindles, on which are mounted cops or bobbins of yarn [both cops and bobbins are shown in the creel in Fig. 1, while one of the cops is also shown at *a* in Fig. 2 (*a*)]. The creels of tube winders may be constructed to receive either cops, bobbins, cheeses, skeins, or spools, depending on the form of the yarn that is to be wound. When used also as doubler winders, the creels are so constructed as to hold a supply from two or more cops, bobbins, etc. for each drum. In Fig. 1, the first four drums are shown as being used for doubler winding, taking ends of yarn from two cops. The next two drums each take one end of yarn only from a cop, while the seventh and eighth drums each take one end of yarn from a ring-spinning bobbin with filling wind. Above the frame and supported at intervals by brackets are two slightly inclined shelves, each of which slopes toward a central vertical partition, thus forming a receptacle for the supply of yarn for the creel and also for empty and filled tubes.

7. Driving of the Winding Drums.—In the application of power to the tube winder two important points must receive consideration—the driving of the winding drums and the method of giving motion to the yarn-traversing apparatus.

Digitized by Google

Underneath and along the middle of the machine is a driving shaft l_2, Figs. 1 and 2 (*a*), carrying at one end a tight pulley l and a loose pulley l_1, Fig. 1. At intervals along the driving shaft are placed double-grooved band pulleys j_2, Fig. 2 (*a*), each of which drives two winding drums, one on each side of the frame, by means of a band j_3 that passes partly around the pulley j_2, then around a smaller grooved pulley j_1 attached to the drum j, again around the pulley j_2, and finally around the pulley j_1 attached to the drum j on the opposite side of the frame. The band is open on one side of the frame and crossed on the other side. In connection with this description, Fig. 6 should be referred to, as this is a top plan view of the banding of one type of a quick-traverse drum winder, which is similar to the one under description except for the mechanism for imparting the traversing motion.

8. **Center Traverse Motion.**—The traverse motion shown in Fig. 3 is often called the **center traverse motion,** to distinguish it from an older form of traverse motion known as the *end traverse motion.* The winding drum j, Figs. 2 (*a*) and 3, is conical, but as it is mounted so that its center arbor, or spindle, is at an angle, the portion of the drum that happens to be on the upper side is always in a horizontal position. Resting on the upper surface of the drum is a tube h mounted on a mandrel h_1, which is cone-shaped for conical-tube winding and straight for parallel-tube winding. The tube is, of course, either cone-shaped or cylindrical according to the method of winding desired. The mandrel revolves in bearings carried by the frame h_2, which can be raised by suitable mechanism and the tube thus lifted from the winding drum. The machine described is shown arranged for winding conical tubes.

Immediately in front of the winding drums is a traverse rod g, having a horizontal reciprocating motion and supporting the traverse guides g. In the upper part of the traverse guide is cut a small slot, through which the yarn passes to the tube when being wound. Curved pieces of wire g_2 are setscrewed to the guides g, as shown in Figs. 1, 2 (*a*), and 3,

Digitized by Google

thus connecting and steadying the guides by forming bridges between them. The wires g_2 also furnish a means of guiding the yarn into the slot, so that after an end has been broken and pieced by the attendant, it is simply laid across the traverse arrangement approximately in the correct position, when it slides down the curved portion of g_2, and thus finds its way into the slot in the traverse guide. A reciprocating motion is given to the rod g_1 and consequently to the traverse guides g and to the yarn that passes through the slots in them. In Fig. 3 (a), the guides are shown at almost the extreme right-hand side of each mandrel; the next movement of the traverse will be toward the left-hand side, thus carrying the yarn across the face of the tube.

In ordinary forms of reciprocating motions, such as those produced by a revolving crank, the speed is greatest at the center of the traverse and gradually diminishes toward each end, and at the point where the traverse is reversed it is almost impossible to prevent a slight dwell. If such a motion were applied to the quick-traverse tube-winding machine, this dwell, although of very brief duration, would result in winding more yarn at the ends of the tubes than at the center and would thus give an uneven surface to the tube. It is the object in all tube-winding machines to reduce this dwell as much as possible by the use of a traverse motion that gives a constant speed to the traverse guides, in order to wind the yarn evenly along the face of the tube, so that in case of a parallel tube the diameter will be the same at all points, and in case of a conical tube the diameter will increase uniformly. In the frame under description the traverse is obtained as follows.

9. The shaft l_2, Fig. 3 (a), that carries the pulleys for driving the drums also carries at its center the bevel gear m, which drives the bevel gear m_1 on the short vertical shaft m_2. At its upper end, the vertical shaft carries a bevel gear m_3 driving another bevel gear m_4 situated on the crank-shaft n, which extends horizontally across the frame above the vertical shaft m_2. At each side of the frame is a metal

Digitized by Google

box that carries the mechanism for imparting a reciprocating motion to the traverse rods g_1. The shaft n extends into these boxes, a suitable portion of which forms bearings for it. The inner upright portion of each box supports a stationary cam k_1, shown in Fig. 3 (*a*) and (*b*). In Fig. 3 (*b*), the traverse rod and some of the other parts have been omitted, so that the construction of the parts that give the throw to the traverse rod may be more clearly shown. The shaft n passes through the center portion of the cam k_1 and carries a casting n_1 firmly setscrewed to it. Securely fastened to the casting n_1 are two studs n_2, n_3 that are free to slide in and out of two chambers in the casting n_4. This latter casting carries a pin, or stud, n_5 on which are situated two cam-bowls k_2, n_6. The cam-bowl k_2 is located on the inner side of the casting n_4 and runs in the course of the cam k_1, while the other bowl n_6 is located on the outside of the casting n_4 and runs in a slot n_7 in the center of the traverse rod g_1, which is enlarged in the center so as to contain the vertical slot n_7. The entire mechanism forms a crank arrangement that gives a reciprocating motion to the traverse rod g_1, the shaft n acting as a crank-shaft.

As the shaft n revolves, it carries with it the casting n_1 and the two studs that slide in the cavities in the casting n_4. Since the studs n_2, n_3 support the casting n_4, and since it carries the cam-bowl k_2, it will slide in and out on the studs n_2, n_3, according to the position of the cam-bowl k_2 in the course of the cam k_1, because the connection with the studs forces the piece n_4 to revolve around the shaft n. The length of the course in the cam k_1 governs the length of the traverse, or throw of the rod g_1 and the guides g.

As the cam-bowl k_2 travels around the course of the cam k_1 by means of the mechanism just described, the vertical position of the cam-bowl n_6 will be constantly changing in the slot n_7 and the rod will be moved first in one direction and then in the other because the piece n_4 is constantly being moved from right to left and left to right.

Each side of the framework supports two sets of brackets g_3, g_4, which serve to support the rods g_5, g_6 that

Digitized by Google

steady and guide the traverse rod g_1. The traverse rod carries two lugs, or projections, g_7, g_8 that slide on the rods g_5, g_6, respectively. These rods carry rubber cushions g_9, g_{10} that can be adjusted to the required position on the rods by means of nuts. These cushions prevent jar of the traverse rod and guides carried by it, and also relieve strain on the cam-bowl k_2 and on the cam k_1 when the bowl is farthest from the center of the cam. The extreme movement of the cam-bowl k_2 in one direction is shown in Fig. 3 (b), while in (a) the positions of the various parts are shown when the cam-bowl is in this position.

The lower part of the box containing the mechanism is of solid construction and contains a supply of heavy oil, sufficiently deep to allow the casting n_4 to dip into it at each revolution. The whole of the mechanism is tightly cased in, so that the oil may be thrown over all parts of the mechanism without escaping, thus securing perfect lubrication.

10. Stop-motions are applied to tube-winding frames for two reasons. In winding single yarn, if an end broke and there were no stop-motion, the last layers of yarn wound on the tube would remain in constant contact with the winding drum and would gradually become glazed and damaged by the constant polishing effect of the drum. In case two or more ends were being wound together on one tube and one broke, if no stop-motion were applied the strand of yarn wound on the cone would contain only one end instead of two in case of 2-ply winding, two ends instead of three in case of 3-ply winding, etc. It is now customary to apply to tube winders a stop-motion so arranged that it will throw the tube out of contact with the winding drum. Such a mechanism is shown in Figs. 2 and 4.

Immediately behind and slightly below the tension board d are situated the drop, or guide, wires e. There is a group of these wires in front of each winding drum j, the number of wires in each group depending on the number of ends being wound on each tube. The framework supports a number of small swing brackets similar to e_2, there being

Digitized by Google

one for each group of drop wires. These brackets swing on a pin, or stud, e_1 that also passes through the lower loop in the drop wires, thus forming a support for them and preventing their falling too far when an end breaks. The yarn passes through the upper loop, or eye, on its passage to the tube and thus holds it in the position shown in full lines in Fig. 4 (*a*). The lower end of the drop wire passes through a hole in the lower part of the bracket e_3. The inner portion of this bracket rests on a flat portion of the framework and is in contact with the lower part of the arm e_4. The construction of the lower portion of this arm is shown in Fig. 4 (*b*); at its upper end it is attached to a long lever e_6, Fig. 2 (*a*), that is fulcrumed at e_7 to the weight lever e_8. The weight lever is fulcrumed at e_9 to the pendent arm e_{10} and carries at one end, by means of a wire hook, a weight e_{11}, while the other end rests against a part of the under portion of the frame h_3. The weight e_{11} thus has a constant tendency to pull down the inner end of the lever e_8 and consequently raise the other end, together with the frame h_3, and also force outwards the lever e_8 and arm e_4. It is prevented from doing this, however, when the yarn is holding the drop wire or wires in their upright position by the pressure of the arm e_4 against e_4. The pendent arm e_{10} is setscrewed to a shaft h_4 that extends the length of the frame. There are two of these shafts, one for each side of the machine, and in addition to carrying pendent arms similar to e_{10}, they support frames similar to h_2.

When an end breaks, the swing bracket e_3 and the drop wire e, together with the arm e_4, assume the position shown in dot-and-dash lines in Fig. 4 (*a*). This is brought about by the wire e dropping because the tension of the yarn has ceased and there is nothing to hold e in position. As the wire falls, its lower end protrudes through the hole in the lower part of the swinging bracket so that it comes in contact with one of the projections of the revolving dog e_5; and as this dog continues its forward movement in the direction shown by the arrow, it carries with it the lower end of the wire and causes the bracket e_3 to turn on the stud e_1.

Digitized by Google

There is one of these dogs for each group of drop wires. When the bracket assumes the position shown in dot-and-dash lines, the inner portion is removed from direct contact with the arm e_8, thereby leaving it free to slide outwards on the framework. This allows the weight e_{11} to move downwards and carry with it the inner end of the arm e_9, raise the upper end, and force outwards the lever e_6 and arm e_5. This action of the lever e_6 raises the frame h_2 and thus lifts the tube h from contact with the drum j, so that the winding of the yarn ceases. The extreme outer portion of the lever e_6 terminates in a handle, and when starting up a tube after an end breaks or a new tube is put in place of a full one, the end is properly pieced up and the lever e_6 forced inwards by means of the handle. The lever is held in position again by means of bracket e_{10}, which allows the frame h_2 to be lowered into position, so that motion is imparted to the tube by means of the drum on which it rests.

11. Fig. 2 (*a*) and (*b*) shows a side view and a plan view of the frame h_2 that carries the mandrel h_1 on which the tube h is placed. The frame is composed of two main parts, which are securely bolted together and swing on the shaft h_3. It is prevented from sliding along the shaft by two collars, one on either side of the two arms that swing on the shaft h_3. The necessary friction to keep the frame from swinging too freely on the shaft is produced by means of a spring h_4 and an adjusting screw h_5. This screw passes through the frame, and when more friction is required it is turned so as to force the part of the spring that is in contact with it nearer the shaft h_3. At the outer ends of the two outward projecting arms are formed two bearings that support the mandrel.

Motion is imparted to the knock-off dog-shaft by means of two grooved pulleys e_{12}, e_{13}, Fig. 2; e_{12}, which is a double-grooved pulley, is on the main driving shaft l_2 of the machine, while e_{13}, which is a single-grooved pulley, is on the dog-shaft e_4. A similar arrangement is applied to the machine illustrated in Fig. 6. As there are two of these dog-shafts, one for each side of the machine, there are two

Digitized by Google

single-grooved pulleys, as shown in Fig. 6. One of the dog-shafts is driven by an open band e_{14}, while the other is driven by a crossed band e_{15}.

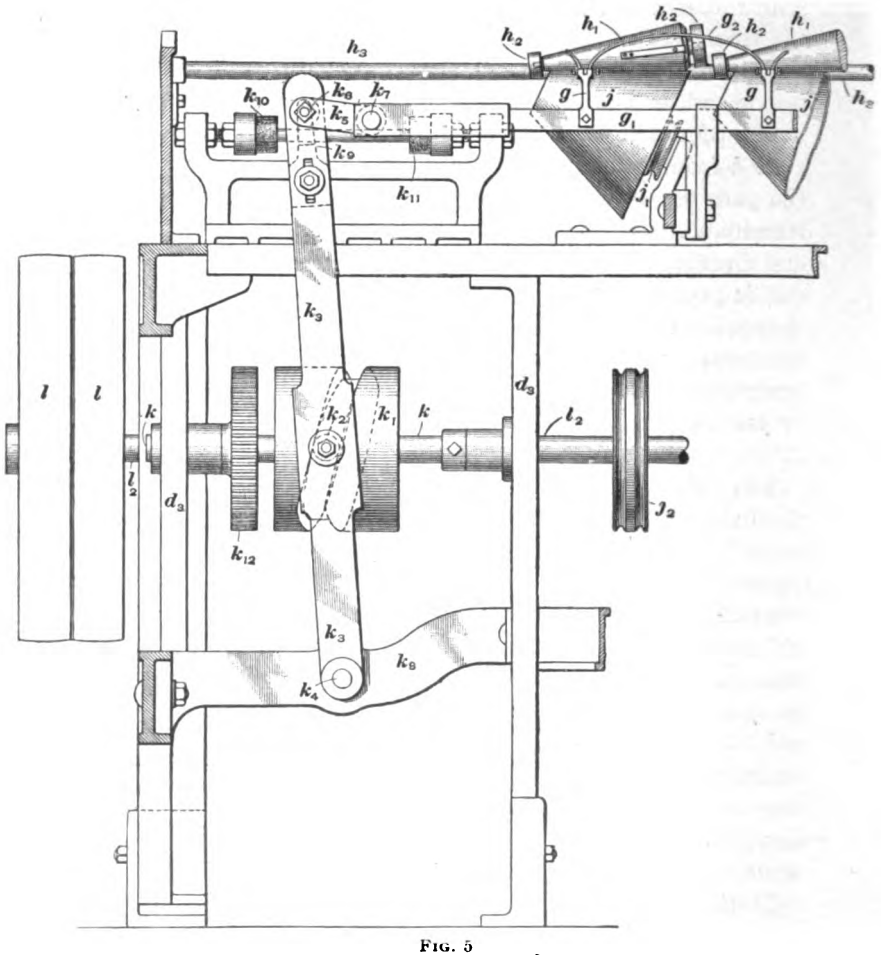

FIG. 5

12. The **end traverse motion,** Figs. 5 and 6, although an older form than that described, is largely used. The guides and guide rods are similar in both cases; the difference lies principally in the construction of the mechanism

Digitized by Google

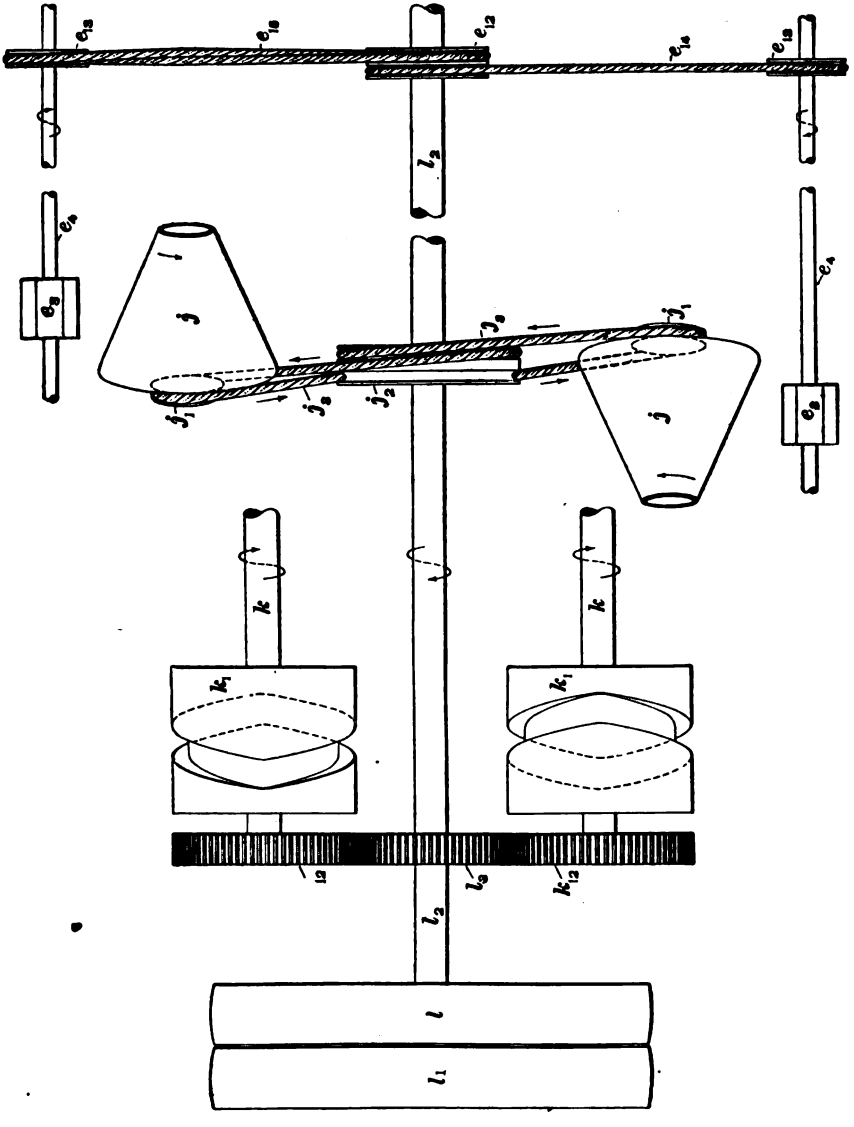

FIG. 6

Digitized by Google

that imparts a reciprocating motion to the guide rod g_1. The main shaft l_3 of the machine carries a gear l_3 that drives the gears k_{12}, k_{13}, one on each cam-shaft k. Fig. 6 is a plan view showing the method of driving the cams k_1, winding drums j, and dog-shafts e_4, while Fig. 5 is a front elevation and shows the method of driving one of the guide rods g_1, the other one on the opposite side being driven in a similar manner. The bracket k_8 extends between the two sampsons d_3 and supports the lever k_2, which is pivoted at k_4; at k_6 is attached a link k_5, which is also attached to the traverse rod g_1 at k_7. The lever k_2 is steadied at the upper end by means of an arm k_9, through which passes a small rod that carries the rubber cushions k_{10}, k_{11}. About two-thirds of the way from the top, the lever carries a stud, which in turn supports a cam-bowl k_3 that works in the course of the cam k_1. The construction of the cam, together with the other parts, is such as to give the upper end of the upright lever k_2 a reciprocating motion, which is communicated to the traverse rod g_1 by the link k_5, thereby causing the guides g to move quickly to and fro across the drums.

13. This tube winder is often spoken of as the *Broadbent winder* from the fact that it was first built by a firm of this name and is still constructed by them, although similar types of machines are now made by other builders. This name is given to it to distinguish it from the Hill & Brown winder and from the Universal winder. The Hill & Brown winder is an older form, and belongs to the drum-winder type, but the traverse of the yarn is obtained without the use of a separate traverse motion, each drum being constructed with a helical slot running along its circumference, first from one side and then to the other, through which the yarn is conducted to the tube. The Broadbent type of winder is constructed in various sizes, from 20 to 160 drums, 100 drums (50 on each side) being a common size. A machine with 100 drums occupies a space of 31 feet 10 inches by 3 feet 11 inches and requires about 1 horsepower to drive it.

Digitized by Google

SPINDLE WINDERS

14. A tube winder of the spindle-winding type accomplishes the same purpose as the quick-traverse drum winder, but in a different manner. The revolving drum used in a drum winder is dispensed with and the yarn wound on a tube placed on a positively rotated spindle. One type of spindle winder is that known as the **Universal winder.** It is shown in Fig. 7 and consists of a single-head machine; that is, there is only one winding spindle, and consequently the machine winds only one tube at a time. A more common construction is to place several of these winding heads side by side on a standard, the number of heads usually not exceeding six, which is the most common number. Spindle winders of this type are capable of winding either parallel or conical tubes, and produce a hard, compact structure with the coils wound closely together, for which reason they are sometimes spoken of as *close-traverse* or *close-winding* machines to distinguish them from the open-traverse or open-winding type, to which drum winders belong.

As the construction of each head in a six-head machine is the same and as this construction corresponds to that of a single-head machine, only the latter type will be described. The single-head machine is shown as winding only one end, but the Universal winder can be, and frequently is, arranged to wind several ends, usually not exceeding three. A considerable portion of the mechanism is enclosed within metal covers and is so shown in Fig. 7. Fig. 8 is a front view of the machine showing the positions of the various parts during winding, while in Fig. 9, which is also a front view, the parts are shown in the positions they occupy after the machine has been automatically stopped and winding has ceased; Fig. 10 shows a side view, partly in section.

15. Passage of Yarn.—Referring to Fig. 7, the bobbin *a* is placed on a spindle in the center of the plate *b*, and the end passed upwards through the guide wire *c*. From the guide wire, the yarn passes around the tension

Digitized by Google

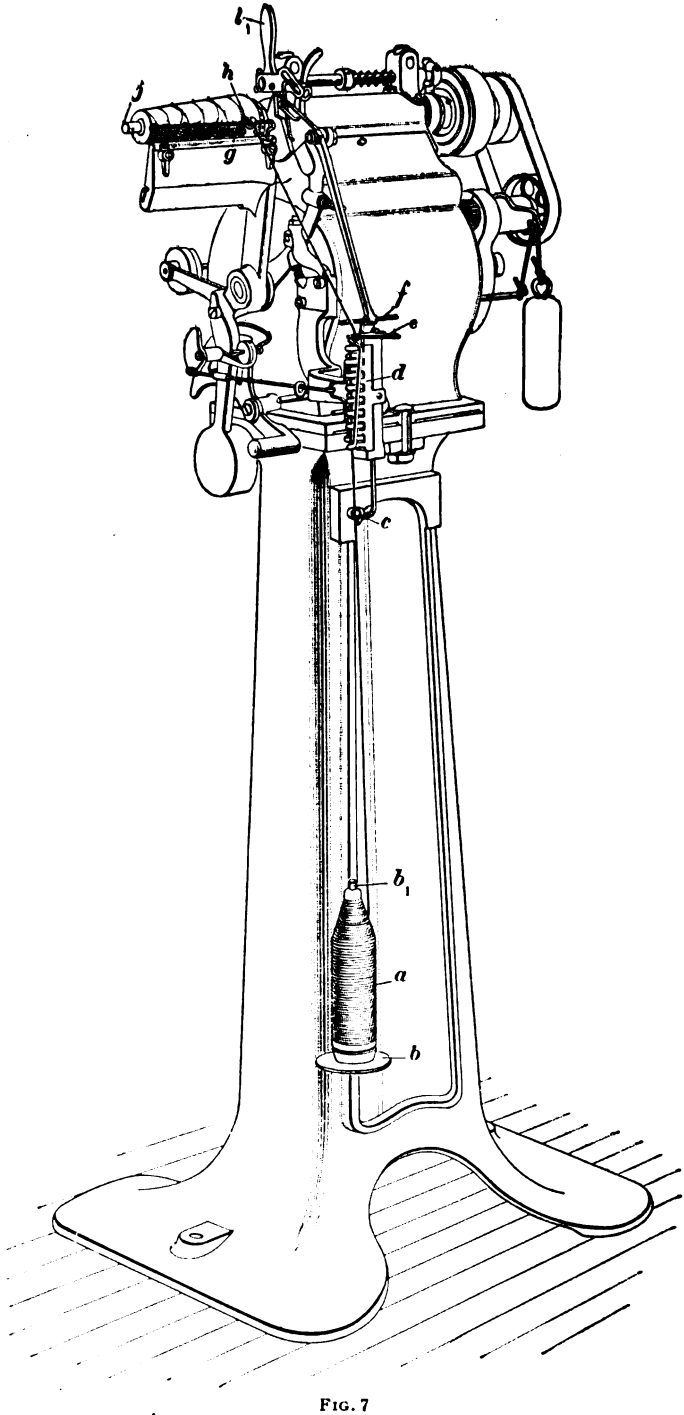

FIG. 7

Digitized by Google

Digitized by Google

Digitized by Google

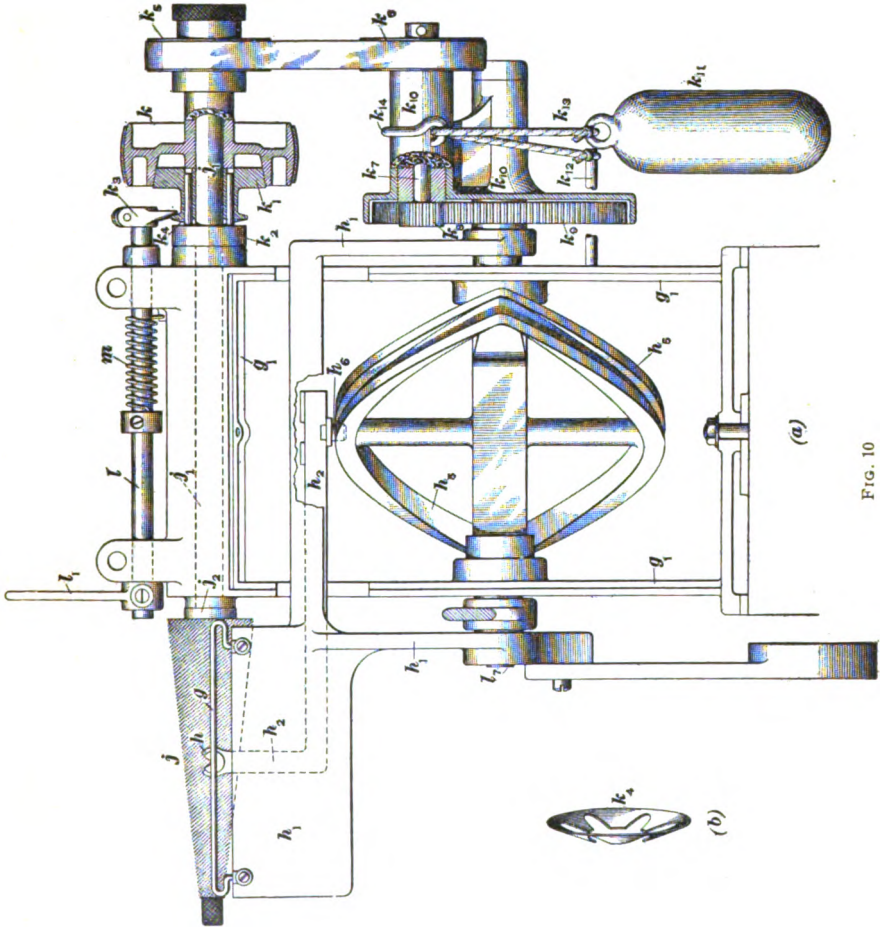

FIG. 10

Digitized by Google

fingers d, through a slot in the plate e, over the pin f, then at an angle to another guide wire g, through the traverse-guide eye h, and on to the tube or cone shell on the spindle j.

16. The **yarn holder** is a simple device for holding the bobbins, cops, etc., from which the yarn is to be wound. A spindle b_1 supported by a bracket attached to the framework carries the bobbin, which rests on a circular plate b that is passed over the spindle so as to form a flange or table around its base.

17. Yarn Guide and Tension Controller.—The yarn guide, or guide wire, c is a bent wire with a curl, or loop, at one end, as shown in Figs. 7, 8, and 9. The center of the loop of the guide wire should be directly in line with the center of the spindle in the yarn holder. This wire is supported by a bracket c_1 attached to the arm c_2. The bracket c_1 also carries the tension-finger plates d_1, d_2, and the kink, or snarl, arrester e. Each plate d_1, d_2 carries eight tension fingers d, which are curved, the face with which the yarn comes in contact being rounded, as shown in Figs. 8 and 9. The plate d_2 is pivoted at each end to a rod d_3 so that it is free to swing on the bracket c_1, while the plate d_1 is securely attached to the bracket. The swinging plate d_2 is connected by a rod d_3 and wire bracket d_4 to a quadrant weight lever d_4, which regulates the amount of tension on the yarn. The tension can be increased or decreased by putting more or less weight on the lever d_4.

The wire c_3, which is supported by the bracket c_1, serves as a guide and facilitates passing the yarn between the tension fingers when they are released and occupy the position shown in Fig. 9. The plate e, which is situated at the top of the bracket c_1 and forms a kink, or snarl, arrester, is simply a flat plate with a long, narrow slot through which the yarn passes. Any kinks, snarls, or bunches in the yarn come in contact with the under side of the plate and are thus prevented from passing forwards on to the tube.

18. The **traverse guide** h, shown more clearly in Fig. 10 (a), is carried by a flat, steel plate h_2 that works

Digitized by Google

in a slot h_3, Fig. 8, in the frame h_1, which swings freely on bushings attached to the framework g_1. The plate h_3 has a number of small lugs that project into the slot h_4, which serves to guide and steady the plate during its movements to and fro. The plate is given a quick traverse motion by means of the cam h_5, Fig. 10 (a), and the cam-bowl h_6, which is supported by a small stud attached to the plate. The frame h_1 carries, in addition to the guide h and plate h_3, the

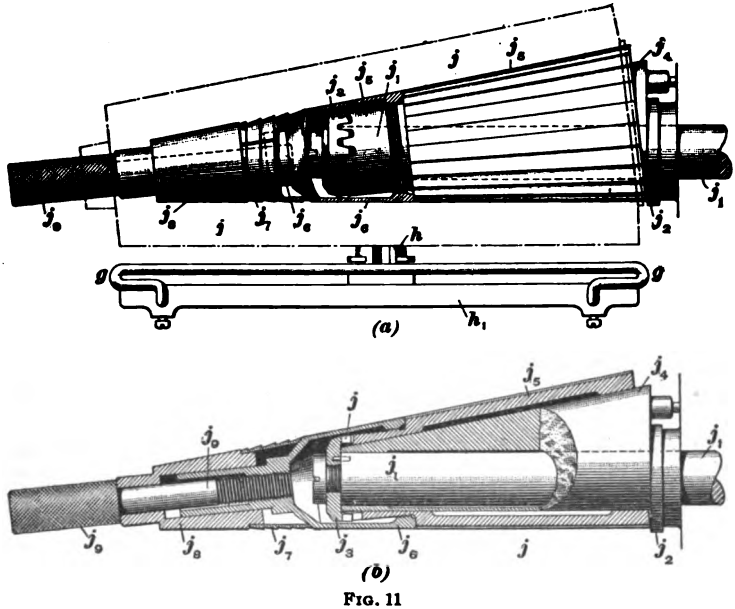

FIG. 11

guide wire g. The quick movement of the traverse guide h causes the yarn to be wound on the tube in long open spirals 2 or 3 inches apart, the next spiral being wound close to the first, the next again close to the previous, etc., thus giving the appearance and effect of a very close wind.

19. The **spindle** in the machine under consideration is for winding conical cheeses and is composed of a number of parts; a plan view partly broken away is shown in Fig. 11 (a) and a section in Fig. 11 (b). The main part j_1 of the spindle j

Digitized by Google

is a straight steel rod with a collar j_2 that comes in contact with the outside end of one of the bearings that support the spindle. There are two of these bearings carried by the framework, one at either end of the spindle. The rod j_1 carries a small gear j_3 and also a cone frustum j_4, which is so mounted that the side nearest the traverse guide h is always parallel to the guide. The frustum j_4 is prevented from revolving with the rod j_1 by a small pin that projects into a hole in the framework. A thin fluted conical shell j_5 that fits over the cone frustum j_4 carries teeth at its small end that mesh with those of the gear j_3 on the rod j_1. As the rod j_1 revolves, the gear j_3 turns the cone shell j_5, which is free to revolve on the frustum j_4. A cap j_6 that fits over this gearing is screwed to the cone shell and consequently revolves with it; about midway of its length the cap has a tapered shoulder so as to open the split ring j_7, which is fluted spirally. Beyond this split ring is another cap j_8, the inner end of which comes in contact with the outer end of the split ring. This cap is forced against the split ring by means of a shoulder on the screw j_9, the head of which is knurled so that it can be turned by hand; the screw passes through the cap j_6 and screws into the straight cylindrical portion of the cap j_8, thus binding the conical shell j_5 and the parts j_8, j_7, j_6 together. A paper cone tube is placed on the spindle and the screw j_9 tightened, which causes the cap j_6 to be forced inwards, thus pushing the split ring up on the shoulder of the cap j_6 and, in consequence, causing the ring to expand. The expanding of the split ring prevents the tube pulling off or getting loose until the screw j_9 is loosened, while the flutes of the conical shell j_5 prevent its turning on the spindle while in position. The position of a cone tube partly filled is shown on the spindle in dot-and-dash lines in Fig. 11 (*a*).

20. Stop-motions are applied to this frame to operate when an end breaks or runs out and when the cheese has attained the desired size. The spindle is the seat, or base, of all the stop-motions and is stopped when any one of the

Digitized by Google

motions acts. The spindle is driven directly from the pulley k by means of a friction cone, shown in section in Fig. 10 (a). When the lever l_1 on the rod l is drawn up to a vertical position, as shown in Fig. 8, the friction cone is thrown in, as explained in Art. **23**, and the spindle caused to revolve. The lever l_1 carries a catch l_2, Figs. 8 and 9, that connects with the catch l_3 on the lever l_4, which is pivoted on a sleeve of the left-hand bearing of the cam-shaft and held in position by a small spiral spring l_5, the setscrew l_6 governing the extent of the upward movement of the lever. The catch l_3 coming in contact with the catch l_2 holds the lever l_1 in its upright position, as shown in Fig. 8.

When the yarn is passing from the holder to the tube, the lever f_1 pivoted at f_2 is held in the position shown by the full lines in Fig. 8 by the yarn passing over the pin f, which prevents the heavier end f_3 falling. When, however, an end breaks or runs out, the end f_3 falls until its face comes in contact with the collar j_2. When this action first takes place, a notch on the face of f_3 bears against that portion of the collar j_2 that is concentric with the rod j_1. As the collar continues to revolve, a flat face on it comes in contact with the face of the upper portion of f_3, thus allowing f_3 to fall still farther until it occupies the position shown by the dot-and-dash lines in Fig. 8. Then, as the spindle continues its revolution, the increase in size of the collar will force the lever f_1 to the right, bringing with it the knock-off lever l_4, which swings on its center l_7, compressing the spring l_8, and disconnecting the two catches l_2, l_3. This allows the spring m on the rod l, Fig. 10 (a), to turn the rod a portion of a revolution, which causes the friction cone to be thrown out, thus stopping the spindle.

Attached to, and swinging with, the lever l_1 is an arm n, Figs. 8 and 9, that has a slot at its outer end connected with the upper end of the lever f_1 by means of a short wire rod. When the two catches unlock and the spring m forces the lever l_1 to the left, looking at the front of the machine, the outer portion of the arm n will be raised, which will lift the upper end of the lever f_1 and cause the lever to turn on its

Digitized by Google

center f_2. The lower end of f_1, being depressed by this action, comes in contact with the upper end of a lever p centered at p_1. The lower end of this lever carries a pin, or stud, p_2, which comes in contact with the wire bracket d_4 attached to the swinging tension plate d_3 and also to the rod d_2 through which the tension is regulated; this forces the wire bracket to the right and opens the tension fingers, so that the yarn can be readily passed between them and pieced to the end on the cheese. When the end is pieced up and the lever l_1 drawn toward the right and locked, the lower end of the lever f_1 rises and assumes the position shown in full lines in Fig. 8. This figure shows the various parts of the stop-motion in the positions they occupy during winding, while Fig. 9 shows the positions of the various parts after the stop-motion has acted and stopped the head. After the machine has knocked off and the lever l_1 occupies the position shown in Fig. 9, the spring l_6 expands and forces up the lever l_4 into position, so that the catch l_3 will lock with the catch l_5 when the lever l_1 is drawn to the right in order to throw in the friction cone and start the machine.

21. The stop-motion that operates when the cheese has attained the desired size is as follows: The lever l_4, Figs. 8 and 9, carries an adjusting screw l_8, which can be turned so as to project through the lever to a greater or less extent, in order to regulate the size of the cheese to be made. The traverse guide h rests against the surface of the cheese, as shown in Figs. 8 and 11 (a). As the cheese increases in size, the traverse guide h and frame h_1, Fig. 8, are gradually forced from the center of the spindle until the cheese has become so large that the frame h_1 is forced against the end of the adjusting screw l_8. A continued increase in the size of the cheese will force the screw l_8 and, consequently, the lever l_4 to the right and unlock the catches l_3, l_5, thus stopping the head.

22. The frame h_1 is counterbalanced by the weight arm h_7, while the arm h_6 carries a stud at its outer end on which weights h_8 are placed, so that the frame h_1 will

Digitized by Google

be held in proper position and exert a slight pressure on the cheese while it is being wound.

The quadrant r, Fig. 8, is used when piecing up a broken end. Pulling the upper end of the frame h_1 to the right, so as to raise the arm h_8 and weight h_9, removes the pressure of the projection h_{10} on the curved surface of the quadrant and allows the latter to swing on its center r_1; as the handle r_2 is heavier than the curved portion r_3, it swings down and raises the curved portion, which is eccentric in its relation to the center r_1, the upper part being nearer the center than the lower part. Consequently, when the upper portion of the frame swings on its center, the quadrant turns so that its curved face is always in close contact with the projection h_{10}. When the pressure has been removed from the upper portion of the frame h_1, the projection h_{10} is allowed to press on the curved surface of the quadrant and thus hold the frame in any desired position. By this means the frame h_1 can be drawn back out of the way to facilitate piecing, after which it can be moved forwards to its proper position by simply raising the handle of the quadrant.

23. Method of Driving.—The main driving pulley of the frame is shown at k, Fig. 10 (a). This pulley is loose on the shaft j_1, but its inner surface is conical to fit a cone k_1 attached to the shaft j_1 by means of two pins firmly fixed in the collar k_2 attached to the shaft. When the lever l_1 is drawn forwards and locked in position, the dog k_3 on the rod l, by reason of its shape, releases the cone k_1 and allows the diaphragm spring k_4 to force it to the right until its conical surface is firmly in contact with the surface of the conical cut-out of the pulley k. This spring is shown in section in position in Fig. 10 (a), while a perspective view is given in Fig. 10 (b). The pulley k is crowned and is about 4 inches in diameter.

The traverse cam h_8 is driven from the spindle shaft j_1 in the following manner: Attached to the spindle shaft j_1 is a pulley k_5 that drives the pulley k_6 by means of a short belt.

Digitized by Google

The pulley k_6 is on a short shaft k_7, the opposite end of which carries a small spur gear k_8 of 20 teeth, which in turn drives a large spur gear k_9 of 120 teeth. The gear k_9 is attached to the cam-shaft and thus imparts motion to the cam h_3. As the casting k_{10} forming a casing for the gears k_8, k_9 and a support for the short shaft k_7 swings on the cam-shaft, some means must be adopted to give the necessary tension to the belt on the pulleys k_5, k_6, in order that the cam-shaft may be driven properly. This is accomplished by having the weight k_{11} connected to a rod, or pin, k_{12} by a cord, or band, k_{13} that passes over the hook k_{14} attached to the casting k_{10}. The pulleys k_5, k_6 are each about 3 inches in diameter.

24. Spindle-winding machines are not usually operated singly, as shown in Fig. 7, but in groups of six heads, spoken of as a *gang* of six spindles. The floor space occupied by a six-head machine is 4 feet 8 inches by 1 foot 8 inches.

MANAGEMENT

25. The points connected with the proper operation of a room of tube winders are numerous and require careful attention. The instructions given by buyers of the yarn should always be carefully followed. These relate principally to the numbers of the yarn and sizes of tubes or cones. The room should be so operated that each number or kind of yarn is kept separate, and thus the possibility of mixing different kinds or qualities avoided, both before the yarn arrives at the machine and at the winder.

Winders are usually constructed to make tubes with a maximum traverse of 6 inches, although occasionally frames are made for 8-inch traverse. Those made for 6-inch traverse can be changed to 5-inch, 4-inch, or even a smaller traverse; the change is usually made by changing the cam, but on some makes of machines, especially those with the traverse motion at the end, a slight adjustment of about 1 inch can be made by changing the leverage of the lever k_3,

Digitized by Google

Fig. 5, by moving the connection at k, downwards or upwards as required.

Buyers do not often specify the length of traverse; for ordinary knitting yarn, when not specified, a 5½-inch traverse is used in case of cones. When yarn is to be wound on cones, the diameter of the cone at its larger end is generally given by the buyer as a guide, usually 7 or 7½ inches. Sometimes as small a diameter as 5½ or 6 inches is required, but very seldom. The attendant should be instructed to remove the cones when they attain the desired size and he should be watched to see that this is done. Parallel tubes are often made with a 5½-inch traverse and a 4½-inch diameter. These dimensions are for ordinary cotton yarns, and of course are varied for other materials and for special purposes. When making parallel tubes, the end of the yarn last wound on should always be tied so as to avoid its raveling off; it is better to do this on cones also, although this is not always done.

26. Among the points that require attention in the operation of the machine are cleanliness and satisfactory oiling. The newer makes of quick-traverse drum winders are so constructed that the traverse motion is self-oiling, while in the Universal winder the spindle is self-oiling, thus avoiding the necessity of constant attention to these quickly revolving parts. There are, however, on the quick-traverse drum winder a number of other parts that do not revolve so quickly but that require oiling twice a week or oftener. Oiling should be carefully performed, since in case of an excess of oil or oil getting on to parts of the machine with which the yarn comes in contact, the yarn will be stained. For the same reason winders should be kept carefully cleaned, so as to avoid the possibility of lint and dirt passing forwards with the yarn.

The rapid reciprocating motion of the traverse rods of drum winders creates considerable jar and vibration, and although this is counteracted by the strong construction of the machines and of the traverse motions, as well as by rubber cushions so placed as to destroy as much as possible of the

Digitized by Google

jar, there is a tendency for parts to work loose and adjustments to become slack. The machines should be carefully and periodically examined for such defects, and all wear taken up promptly and loose parts tightened. If such defects are attended to at once, it prevents additional wear and enables the machine to be run with much less vibration.

The full tubes from each machine should be occasionally examined to make sure that the yarn does not overrun at the ends, which produces what are called *cobwebs* or *dropped ends* and makes it difficult to unwind the yarn at the next process, often causing breakage there. In some cases this is caused by faulty construction of the machines and is then difficult to remedy, but more frequently it is on account of parts working loose and wearing, which consequently allow the ends to run over the ends of the tube. A careful study should be made of the best relation between the speed of traverse and the length of the yarn wound. Some classes of yarn, especially smooth, or polished, yarn or ply yarn, require a quicker traverse in proportion to the amount of yarn wound than ordinary yarns or single yarns.

In case of winding more than one end on a tube, the stop-motion should be kept in perfect order so as to act promptly in case an end breaks; otherwise the strand of yarn will pass to the tube with one end short of the required number. When an end breaks it should be carefully tied to the other end with a small knot. In case of winding two ends to one tube, the single broken end should be tied to the other single end and not made into a bunch knot. The tension on the yarn should also be carefully adjusted so that the same amount will be applied to every end. This is of special importance in case of winding several ends together where the object is to wind exactly the same length of each end on the tube. Should there be less tension on one end than another, a slightly different length of yarn would pass from one cop or bobbin than from the others, thus tending to make corkscrewed yarn at the twisting process.

In the case of the Universal winder, care should be taken to have the friction cone fit the conical shell properly, in order

Digitized by Google

to obtain a positive and even drive when it is necessary to revolve the spindle, and also so that it will be out of contact with the shell when it is necessary to stop the spindle. When the friction cone is out, the driving pulley should revolve freely on its shaft without imparting motion to any other part of the machine.

Before shipping the tubes or cheeses, they should be separately wrapped in paper and packed in wooden cases, which are also lined with paper. These cases are of different sizes according to the requirements of buyers, but a common weight of case with open-wound tubes or cones such as are made on the quick-traverse drum winders is 250 pounds, although sometimes large cases are used with a capacity of 400 pounds. A greater weight of yarn wound on a close-winding spindle winder can be packed in a case and runs as high as 350 pounds for the ordinary sized case. The attendants are usually women, who are paid so much per 100 pounds, a slightly higher rate being paid for winding from ring bobbins than from cops.

27. The production of the various machines depends on the counts and quality of the yarn and the number of ends that are being run, as well as the form into which it is being wound. These factors affect the speed at which it is possible to run the machine, but for all ordinary purposes a well-constructed quick-traverse drum winder can be operated so as to wind 140 or 150 yards per minute, and the net production after allowing for breakages and stoppages for various purposes should be in excess of 100 yards per minute for each drum or spindle.

The makers of spindle winders claim that the production per spindle is approximately three times that of a drum of a quick-traverse drum winder.

Views are shown in Fig. 12 of the various styles of conical and parallel tubes. The conical tubes are shown at (*a*) and (*b*), (*a*) being an open-wind tube such as is made on a quick-traverse drum winder, and (*b*), a close-wind tube as produced on a spindle winder. A parallel tube with an open

Digitized by Google

wind is shown at (*c*) and one with a close wind at (*d*). These are all shown built up on paper tubes. A spool with

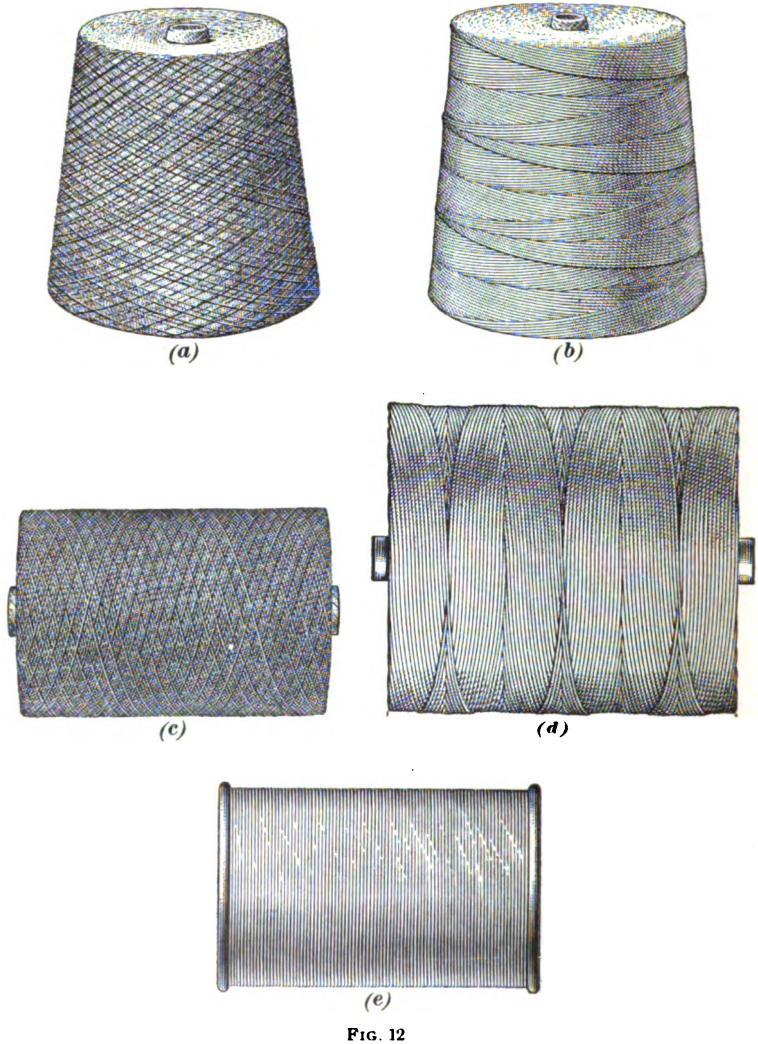

FIG. 12

double heads, such as made on the slow-traverse drum winder, is shown at (*e*).

Digitized by Google

BACK WINDING FOR WEAVING YARNS

28. Back winding is the term applied to the rewinding of skeined yarns in suitable form for the purpose for which they are intended. Another name for this is *skein winding*. Skeined yarns for weaving may be rewound for use either as filling or as warp, although back winding for filling yarns is much more common than for warp yarns.

29. Pirn Winder.—The back winding of filling yarn is performed on a **pirn**, or **quill, winding machine** so constructed as to hold the skein on a rice, or swift, constructed of wood with a number of pairs of rods, radiating in different directions, inserted in the center hub, and tied together at their ends. The hubs contain two pins, each of which rests in a suitable bearing. The skein of yarn is stretched over the ends of the rods in a suitable position for unwinding and the end passed to a bobbin placed on a horizontal or vertical spindle, being given a short traverse that builds it up in the form shown in Fig. 13 (*b*). The empty bobbin is shown in section at (*a*). Such bobbins are called *quills*, *pirns*, or *shuttle bobbins*.

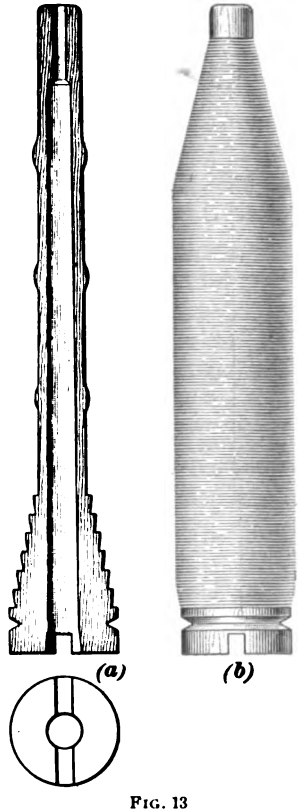

FIG. 13

30. The **slow-traverse drum winder** is the machine used for backwinding skeined yarn that has been bleached,

Digitized by Google

dyed, mercerized, or otherwise treated, on to double-headed spools, Fig. 12 (*e*), for warping purposes. The skein of yarn is held in the same way as in pirn winding. Motion is imparted to the spool by its resting on a revolving drum of suitable width to fit between the heads of the spool, and a traverse corresponding to the distance between the heads is given to the yarn. This traverse is comparatively slow so as to build up the yarn in a succession of even layers until the spool is filled, and the name slow-traverse winding is therefore given to this process to distinguish it from quick-traverse winding, which forms tubes of yarn built up on a paper or wooden tube without heads.

31. Miscellaneous Winding Machines. — Various other types of winders are used for special purposes in various branches of the textile trade. The number of varieties and the many different styles of construction prevent a detailed description of each, but most of the machines consist merely of a framework for holding in a suitable position the yarn to be unwound and some mechanism for driving the part of the machine that carries the framework on which the yarn is to be wound. One form of such machines is that known as the cop winder, in which the yarn is wound on to a cop to be used in the shuttle of the loom or of a sewing or embroidery machine. Winders are also made to take yarn from imperfectly wound cops, bobbins, or quills, and rewind it in perfect form, thus avoiding the loss that would result if the yarn were cut off and sold as waste.

The construction of the machines is usually of the simplest and their operation and management do not involve any special knowledge beyond that of applying the ordinary methods of cleaning, oiling, and economical operating by reducing the possibilities of making waste, and keeping the machinery in proper repair and running order.

Perhaps the most important matter to look out for in many cases is to have the machinery so oiled and cleaned as to prevent the possibility of black oil coming in contact with the yarn as it passes through the machine.

Digitized by Google

INDEX

NOTE.—The items in this index refer first to the section and then to the page of the section. Thus, "Bobbins 43 21" means that "Bobbins" will be found on page 21 of section 43.

A	Sec.	Page
Allan-seed yarns	43	9
Alluvial soil	87	9
Alpaca yarns	44	21
American cotton, Yarns from	43	9
Animal fibers	43	4
" " Yarns from	44	1
Arch, Bonded	87	47
" Rowlock	87	47
Arc lamps	88	65
Artificial lighting	88	63
" or made ground	87	9
Asbestos yarns	44	27
Attachments, Measuring	69	19

B		
Babcock and Wilcox water-tube boiler	88	12
Back winding for weaving yarns	93	31
Bad selvage	69	28
Bales of yarn, Pressed	92	27
" " " Soft	92	27
Baling and bundling reeled yarns	92	26
" " reeling	92	1
" cloth	68	3
" "	69	22
" press, Construction of	92	27
" " Hydraulic	69	22
" " Screw	69	22
" " Togglejoint	69	22
" presses	69	22
" yarn	92	33
Balled chains	43	30
Balls of linen yarn	43	41
Banding, Cotton	43	38
" skeins	92	16
Bead yarns	44	45
Beams of linen yarn	43	41
Beam warps	43	29
" "	44	10
" " Worsted	44	19
Bearing value of foundation soils	87	10
" values of soils, Safe	87	11
Beating and scraping fabrics	68	2
Belgian wool-spinning system	44	7
Blade, Ledger	68	24
Bleached yarns	44	29
Bleaching yarns	44	29
Blind end	69	29
Bobbin for silk, Quill or filling	44	27
" Worsted	44	16
Bobbins	43	21
"	44	8
" Filling	43	21
" Knitting-yarn	43	26
" of linen yarn	43	41
" Ring-frame	43	21
" Shuttle	43	24
" Taper	43	27
" Throstle	43	22
" Twister	43	23
" Warp	43	21
Boiler, Babcock and Wilcox water-tube	88	12
" grates	88	26
" Heine water-tube	88	14
" Plain cylindrical	88	4
" Return tubular	88	9
" Stirling	88	16
Boilers	88	2
" Cornish	88	11
" " and Lancashire	88	10
" Externally fired	88	10
" Fire-tube	88	12
" Galloway	88	11
" Internally fired	88	12
" Lancashire	88	11
" Water-tube	88	12
Bonded arch	87	47
Bond, English	87	43
" Flemish	87	44
" Garden, or running	87	45
" Heading	87	43
" in brickwork	87	40
" Stretching	87	43

Digitized by Google

	Sec.	Page
Bouclé yarns	44	49
Bourette or knotted twists	44	49
" " " yarns	44	48
Bradford system, Worsted yarns made on the	44	13
Brick, Burning the	87	31
" laying	87	36
" " in extremely hot or cold weather	87	39
" making and bricks	87	30
" piers	87	49
" Strength and quality of	87	32
" walls, Openings in	87	47
" " Thickness of	87	33
Bricks	87	30
" and brickmaking	87	30
" Hand-made	87	30
" Machine-made	87	31
" Size of	87	32
Brickwork above the foundation	87	30
" Bond in	87	40
" Joints in	87	38
" Measuring	87	51
Brilliant yarns	44	50
Broken picks	69	28
Brushers, Cotton	68	34
Brushes, The	68	24
Brushing-and-inspecting machine	69	1
" " shearing	68	22
" cloth	68	2
Bunch yarns	44	47
Bundles of yarn	92	31
Bundling and baling reeled yarns	92	26
" press, Construction of	92	31
Burning the brick	87	31

C

Calculation of cotton consumed	89	8
Calculations, Reeling	92	24
Calendering cloth	68	2
Calender rolling machine	68	36
Capacities of underwriters' pumps	88	71
Card and picker rooms, Supplies for	89	25
" slivers, Hank of	89	6
Carded yarn	43	12
Carding and spinning	89	12
Cards	89	12
Care and operation of a cloth folder	69	15
Carpet yarns	43	36
Carrying up the walls	87	46
Cases or rolls, Shipment of cloth in	69	27
Cashmere or Tibet yarns	44	22
Cement-and-lime mortar	87	28
" mortar	87	29
Center traverse motion	93	8
Chains, Balled	43	30
" Linked	43	31
" of yarn	43	30
Character of soil	87	5
Checking and receiving cloth	68	1
" Cloth	68	7
Chimneys	87	50
Chinese and Japanese yarns	43	10
Classes of goods, Designing mills for different	89	3
Classification of cotton yarns	43	8
" of cotton yarns according to counts	43	16
" of cotton yarns according to the forms in which they are put up	43	17
" of cotton yarns according to their preparation and appearance	43	11
" of cotton yarns according to use	43	34
" of silk by raw material	44	22
" of silk yarns according to the country of origin	44	23
" of silk yarns according to the method of preparation	44	23
" of yarn	43	2
" of yarns according to material	43	4
" of yarns according to treatment after twisting and spinning	44	28
Class of goods to be manufactured	87	2
Clay	87	7
Cloth, Baling	68	3
" "	69	22
" Brushing	68	2
" Calendering	68	2
" checking	68	7
" Cut of cotton	68	7
" finishing and weaving	89	17
" folder	69	6
" " Care and operation of	69	15
" " Driving a	69	11
" Folding	68	2
" " and measuring	69	6
" Foreign shipment of	69	26
" Inspecting	68	2
" inspection	69	28

Digitized by Google

	Sec.	Page
Cloth, Preparation of, for shipment	69	22
" Print	89	3
" Receiving and checking	68	1
" Rolling	68	2
" room processes and machinery	68	1
" rooms	68	1
" "	69	1
" Sewing	68	2
" Shipment of, in rolls or cases	69	27
" Stamping	68	3
" "	69	19
" " machines	69	21
" Thick places in	69	29
" Thin pieces in	69	29
" Ticketing	68	3
" trimmer	69	1
" " Driving arrangement of	69	4
Coarse goods, Mills for manufacturing	89	3
Coconut fiber	43	44
Cold or hot weather, Bricklaying in extremely	87	39
Coloring, Varieties of regular yarn resulting from	44	36
Columns	87	61
" Strength of	87	61
Combed yarn	43	12
Combinations of novelty yarns	44	50
Compound engines	88	26
" "	88	38
Concrete and stone footings	87	13
Condensation water in heating systems	88	54
Condensed yarns	43	14
" " Drawn and	43	2
Condensers	88	37
Conditioning yarns	44	34
Cones and tubes for woolen yarn	44	10
" " " of linen yarn	43	41
Conical and parallel tubes of silk	44	27
" " " tubes of worsted yarn	44	19
" " " tubes of yarn	43	33
Construction, Mill	87	1
" " basement	87	27
" of baling press	92	27
" " bundling press	92	31
" " mills, Interior	87	54
" " reels, Variations in	92	22
" Slow-burning mill	87	54
Consumed, Calculation of cotton	89	8
Controller, Yarn guide and tension	93	20
Converted yarns	44	28
Converting, Yarns for	43	36
Cop-dyed yarn	44	29
" Worsted	44	18
Cops	43	41
" of silk yarn	44	26
" Pin	44	26
Cordage, Yarns for	43	37
Cords, Tinsel	44	50
Corkscrew yarns	44	44
" " Twist	44	48
Corliss engine	88	32
Cornish and Lancashire boilers	88	10
" boilers	88	11
Cost of machinery for a 10,000-spindle mill	89	21
" " mill machinery	89	19
" " " Total	89	20
Cotton banding	43	38
" brushers	68	34
" cloth, Cut of	68	7
" consumed, Calculation of	89	8
" driving ropes	43	38
" mill planning	89	1
" warp spools	43	28
" yarns	43	8
" yarns, Classification of	43	8
" yarns, Classification of, according to counts	43	16
" yarns, Classification of, according to the forms in which they are put up	43	17
" yarns, Classification of, according to their preparation and appearance	43	11
" yarns, Classification of, according to use	43	34
" yarns for rugs	43	37
" Yarns from American	43	9
" yarns, Peruvian	43	10
" yarn, Skeins of	43	28
Country of origin, Classification of silk yarns according to the	44	23
Counts, Classification of cotton yarns according to	43	16
Creel	93	7
Creels	92	3
Crêpe, or extra-hard, yarns	44	44
" yarns, Ply	44	48
Cultivated and wild silk	44	22
Curl yarns	44	49
Cut of cotton cloth	68	7
Cylindrical boiler, Plain	88	4

D

Damping yarns	44	34
Dead-weight safety valve	88	23

Digitized by Google

	Sec.	Page
Designing mills for different classes of goods	89	3
Details of direct-heating systems	88	56
Diamond twists	44	50
Direct-heating system, Details of	88	56
" system of steam heating	88	53
Doffing	92	19
Doors, Mill	87	65
Double reeling	92	13
Drawing and fly frames, Supplies for	98	28
" frames	89	12
Drawn and condensed yarns	43	2
" yarns, Single	43	11
Drills	89	3
Driving a cloth folder	69	11
" arrangement of cloth trimmer	69	4
" of the winding drums	93	7
" ropes, Cotton	43	38
" shearing-and-brushing machines	68	32
" winding machines, Method of	93	25
Drums, Driving of the winding	93	7
Drum winder, Slow-traverse	93	31
" winders, Quick-traverse	93	3
Dyed and weighted yarns	44	29
" yarns	44	29
Dynamos	88	65

E

Economizers, Fuel	88	20
Egyptian yarns	43	9
Electric lighting	88	64
" lights, Wiring for	88	67
Employed, Help to be	87	2
End, Blind	69	29
" traverse motion	93	14
Ends, Mill	69	28
" out	69	28
Engine, Corliss	88	32
" governors	88	34
" Slide-valve	88	28
Engineering, Mill	87	1
" "	88	1
" "	89	1
Engines, Compound	88	26
" "	88	38
" Simple	88	26
" Steam	88	26
" Triple-expansion	88	26
English bond	87	43
Equipment, Machinery	89	8
Examples of water turbines	88	47
Excavations	87	5
Exhaust steam, Heating with	88	54
Export, Yarns for	43	36
Externally fired boilers	88	10
Extract	44	5
Extra-hard, or crêpe, yarns	44	44

F

Fabrics, Scraping and beating	68	2
" Shearing	68	2
Feed-apparatus, Water	88	18
" water heaters	88	19
Fiber, Coconut	43	44
" Pineapple	43	44
Fibers, Animal	43	4
" Fruit	43	44
" Mineral	43	5
" Vegetable	43	4
" Yarns from animal	44	1
" " " leaf	43	44
" " " mineral	44	27
" " " stem	43	39
" " " vegetable	43	1
Filling bobbins	43	21
" or quill bobbin for silk	44	27
" spinning frames, Production of	89	10
Fine goods	89	4
Fire-prevention	88	68
" " and protection	88	68
" protection, Inside	88	72
" " Outside	88	69
" tube boilers	88	12
" walls	87	50
Flake yarns, Ply	44	46
" " Single	44	42
" " Two-ply	44	46
Flemish bond	87	44
Floats	69	29
Floors, Mill	87	57
Floor space and machinery for a 10,000-spindle mill	89	19
Fly and drawing frames	89	28
Folded yarn	43	14
Folder, Care and operation of a cloth	69	15
" Cloth	69	6
" Driving a cloth	69	11
Folding and measuring cloth	69	6
" cloth	68	2
Footings, Concrete and stone	87	13
" for piers	87	18
" Foundation	87	10
" on piles, Stone	87	21
" " " Timber	87	21
" " rock and gravel	87	17
" Timber	87	11

Digitized by Google

	Sec.	Page
Foreign shipment of cloth	69	26
Forms in which put up, Linen yarns classified according to the	43	40
Foundation, Brickwork above the	87	30
" footings	87	10
" soils, Bearing value of	87	10
" walls	87	23
" " partly on rock	87	26
" " Stone-rubble	87	23
" " Thickness of	87	23
Foundations	87	10
Frames, Drawing	89	12
" Intermediate	89	13
" Production of filling spinning	89	10
" Production of intermediate	89	14
" Production of roving	89	14
" Production of warp spinning	89	9
" Roving	89	15
" Spinning	89	15
French reeling	92	12
" spinning	44	14
" spun worsteds	44	14
" system, Yarns made on the	44	14
Fruit fibers	43	44
Fuel and mill supplies	87	4
" economizers	88	20
Fusible plugs	88	25

G

Galloway boilers	88	11
Garden, or running, bond	87	45
Gas and oil lights	88	63
" lighting	88	64
Gassed, or Genapped, yarns	44	33
Gauge glass	88	25
" Steam	88	24
Genapped, or Gassed yarns	44	33
Gimp yarns	44	46
Glass, Gauge	88	25
" yarns	44	28
Glazed and polished yarns	44	32
Goods, Designing mills for different classes of	89	3
" Fine	89	4
" Medium-weight	89	3
" Mills for manufacturing coarse	89	3
" to be manufactured, Class of	87	2
Governors, Engine	88	34
Grain reeling	92	12
Grandelle, Mock	44	39
Grant reeling	92	11
Grates, Boiler	88	26
Gravel	87	7
" and rock, Footings on	87	17
Grinder, Shear	68	34
Grinnell sprinkler head	88	75
Ground, Made, or artificial	87	9
Guide, Traverse	93	20
" Yarn and tension controller	93	20

H

Hair, Yarns produced from	44	21
Half-worsted yarns	44	16
Hand-made bricks	87	30
" sewing, Rolling machines and	68	21
Hank of card slivers	89	6
" " laps	89	6
Hard pan	87	7
Head, Grinnell sprinkler	88	75
" Rolling	68	30
Heading bond	87	43
Heads, Sprinkler	88	74
Heaters, Feedwater	88	19
Heating, Direct system of steam	88	53
" Indirect system of steam	88	60
" mills	88	53
" systems, Condensation water in	88	54
" with exhaust steam	88	54
" " live steam	88	54
Heine water-tube boiler	88	14
Help to be employed	87	2
Hemp, Manila	43	42
" "	43	44
" New Zealand	43	44
" yarns	43	42
Holder, Yarn	93	20
Horsehair	44	22
Hose and Hydrants	88	69
" houses, Supplies for	89	30
Hot or cold weather, Bricklaying in extremely	87	39
Hydrants and hose	88	69
Hydraulic baling press	69	22

I

Incandescent lighting	88	64
Indirect system of heating	88	60
Inside fire-protection	88	72
Inspecting-and-brushing machine	69	1
" cloth	68	2
Inspection, Cloth	69	28
Interior construction of mills	87	54
Intermediate frames	89	13
" " Production of	89	14

Digitized by Google

	Sec.	Page
Intermittent yarns	44	38
Internally-fired boilers	88	12
J		
Japanese and Chinese yarns	43	10
Joining new walls to old	87	46
Joints in brickwork	87	38
Jute	43	43
" yarns	43	43
K		
Knickerbocker mock twist	44	43
" yarns	44	43
Knitting-yarn bobbins	43	26
" yarns	43	35
Knotted, or bourette, twists	44	49
" " " yarns	44	48
Knotting	92	22
L		
Lamps, Arc	88	65
Lancashire and Cornish boilers	88	10
" boilers	88	11
Laps, Hank of	89	6
Layout of machinery	89	22
Leaf fibers, Yarns from	43	44
Lea reeling	92	11
Ledger blade	68	24
Lever safety valve	88	23
Lighting, Artificial	88	63
" Electric	88	64
" Gas	88	64
" mills	88	63
Lights, Oil and gas	88	63
" Wiring for electric	88	67
Lime mortar	87	29
Linen yarn, Balls of	43	41
" " Beams of	43	41
" " Bobbins of	43	41
" " Pirns of	43	41
" " Spools of	43	41
" yarns	43	39
" " classified according to forms in which put up	43	40
" " classified according to the methods of preparation	43	40
" " classified according to use	43	42
" " Cones and tubes of	43	41
" " Skeins of	43	41
Linked chains	43	31
Live steam, Heating with	88	54
Loam	87	8
Long-diamond reeling	92	11
Looms	89	17
Loop yarns	44	49
M		
Machine, Brushing-and-inspecting	69	1
" Calender-rolling	68	36
" made bricks	87	31
" Quill winding	93	31
Machinery and floor space for a 10,000-spindle mill	89	19
" Cloth-room processes and	68	1
" Cost of mill	89	19
" equipment	89	8
" for a 10,000-spindle mill, Cost of	89	21
" Layout of	89	22
Machines, Cloth stamping	69	21
" Driving, shearing, and brushing	68	32
" Method of driving winding	93	25
" Miscellaneous winding	93	32
" Portable sewing	68	20
" Rolling and hand sewing	68	21
" Sewing-and-rolling	68	9
" Shearing-and-brushing	68	22
" Trimming-and-inspecting	69	1
Made, or artificial, ground	87	9
Management of reels	92	25
" " tube winders	93	26
Manila hemp	43	42
Manufactured, Class of goods to be	87	2
Manufacture, Woolen yarns classified according to the methods of	44	6
" Worsted yarns classified according to methods of	44	11
Manufacturing coarse goods, Mills for	89	3
Market and transportation facilities	87	3
Marshy soils	87	8
Material, Classification of silk by raw	44	22
" Classification of yarns according to	43	4
" for woolen and worsted yarns, Raw	44	2
" Woolen yarns classified according to raw	44	4
" Worsted yarns classified according to raw	44	3
McCormick turbine	88	49

Digitized by Google

	Sec.	Page
Measuring and folding cloth	69	6
" " traverse motions	92	17
" attachments	69	19
" brickwork	87	51
" motion	69	13
Mechanism, Rolling	68	12
" Stitching	68	15
Medium-weight goods	89	3
Mercerized yarn	44	31
Mercerizing	44	31
Method of driving winding machines	93	25
" " manufacture, Worsted yarns classified according to	44	11
Methods of manufacture, Woolen yarns classified according to the	44	6
" " preparation, Linen yarns classified according to the	43	40
" " reeling	92	10
Mill-basement construction	87	27
" construction	87	1
" " Slow-burning	87	54
" Cost of machinery for a 10,000-spindle	89	21
" doors	87	65
" ends	69	28
" engineering	87	1
" "	88	1
" "	89	1
" floors	87	57
" Machinery and floor space for a 10,000-spindle	89	19
" " Cost of	89	19
" organization	89	4
" Preparatory processes in a cotton	89	11
" roofs	87	63
" site, Selection of a	87	1
" supplies	89	25
" " and fuel	87	4
" Total cost of	89	20
" Type of	89	2
" walls, Thickness of	87	35
" windows	87	67
" "	88	63
Mills for different classes of goods, Designing	89	3
" " manufacturing coarse goods	89	3
" Heating	88	53
" ventilating, and lighting	88	53
" Interior construction of	87	54
Mills, Lighting	88	63
" Size of	89	4
" Ventilation of	88	62
Mineral fibers	43	5
" " Yarns from	44	27
Miscellaneous supplies	89	30
" winding machines	93	32
Mispicks	69	28
Mixes	44	37
Mixture yarn, Worsted	44	16
" yarns	44	6
Mock grandelle	44	39
" twist, Knickerbocker	44	43
" " yarns	44	39
Mohair yarns	44	21
Mortar	87	28
" Cement	87	29
" " and-lime	87	28
" " " "	87	30
" Lime	87	29
Motion, Center traverse	93	8
" End traverse	93	14
" Measuring	69	13
" of reels, Traverse	92	8
Motions, Measuring and traverse	92	17
" Special	92	17
Mule-spun yarns	43	12
Mungo	44	5

N

New American turbine	88	50
" walls to old, Joining	87	46
" Zealand hemp	43	44
Novelty yarns	44	40
" " Combinations of	44	50
" " Ply	44	44
" " Single	44	42

O

Oil and gas lights	88	63
Old walls to new, Joining	87	46
Opening in brick walls	87	47
Operation and care of a cloth folder	69	15
Ordinary wool-spinning process	44	7
Organization, Mill	89	4
Organzine yarn	44	24
Osnaburgs	89	3
Outside fire-protection	88	69

P

Parallel and conical tubes of silk	44	27
" " conical tubes of worsted yarn	44	19
" " conical tubes of yarn	43	33
" ply tapes	43	39

Digitized by Google

	Sec.	Page
Part-wool yarns	44	5
Passage of the yarn	92	2
" " "	93	7
" " yarn	93	17
Peeler yarns	43	9
Peruvian cotton yarns	43	10
Picker and card rooms, Supplies for	89	25
Picks, Broken	69	28
Piers, Brick	87	49
" Footings for	87	18
Piles, Shoeing	87	20
" Stone footings on	87	21
" Timber footings on	87	21
Piling	87	19
Pin cops	44	26
Pineapple fiber	43	44
Pirns of linen yarn	43	41
Pirn winder	93	31
Pitch-faced rock	87	53
Pit or virgin sand	87	8
Plain cylindrical boiler	88	4
Planning, Cotton-mill	89	1
Plant, Power	88	2
Plugs, Fusible	88	25
Plumbing and water supply	88	78
Ply crêpe yarns	44	48
" flake yarns	44	46
" novelty yarns	44	44
" tapes, Parallel	43	39
" yarns	43	14
" "	44	39
" " Woolen and worsted	44	19
Polished and glazed yarns	44	32
Portable sewing machines	68	20
Power plant	88	2
" Steam	88	2
Preparation of cloth for shipment	69	22
" Warp	89	15
" "	89	28
Preparatory processes in a cotton mill	89	11
Prepared worsted yarns	44	12
" yarns	44	33
Preparing yarns	44	33
Press, Construction of baling	92	27
" " " bundling	92	31
" Hydraulic baling	69	22
" Screw baling	69	22
" Togglejoint baling	69	22
Pressed bales of yarn	92	27
Presses, Baling	69	22
Prevention and protection, Fire	88	68
Print cloth	89	3
Printed yarns	44	32
Processed yarns	44	34
Processes and machinery, Cloth-room	68	1
" Preparatory, in a cotton-mill	89	11
Process, Ordinary wool spinning	44	7
Production of filling spinning frames	89	10
" " intermediate frames	89	14
" " reels	92	24
" " roving frames	89	14
" " slubbers	89	13
" " warpers	89	16
" " warp spinning frames	89	9
Protection and prevention, Fire	88	68
Pumps, Capacities of underwriters'	88	71
Pump, Underwriters'	88	70
Pure woolen yarns	44	4

Q

Quality and strength of brick	87	32
Quarry-faced stone	87	53
Quicksand	87	8
Quick-traverse drum winders	93	3
Quill or filling bobbin for silk	44	27
" winding machine	93	31
Quills	43	24

R

Ramie yarns	43	43
Random yarns	44	38
Raw material, Classification of silk by	44	22
" for woolen and worsted yarns	44	2
" " Woolen yarns classified according to	44	4
" " Worsted yarns classified according to	44	3
Receiving and checking cloth	68	1
Reeled yarns, Bundling and baling	92	26
Reeling and baling	92	1
" calculations	92	24
" Double	92	13
" French	92	12
" Grain	92	12
" Grant	92	11
" Lea	92	11
" Long-diamond	92	11
" Methods of	92	10
" Single	92	13
" Slack	92	23
" Warp	92	12
Reels	92	2
" Management of	92	25

Digitized by Google

	Sec.	Page
Reels, Production of	92	24
" Traverse motion of	92	8
" Variations in construction of	92	22
Reel, Swift of a	92	6
Regulating turbines	88	43
Repair shop, Supplies for	89	29
Return-tubular boiler	88	9
Ring-frame bobbins	43	21
" spun yarns	43	12
River sand	87	8
Rock	87	7
" and gravel, Footings on	87	17
" faced stone	87	53
" Foundation walls partly on	87	26
" Pitch-faced	87	53
Rolling and sewing	68	9
" cloth	68	2
" head	68	30
" machines and hand sewing	68	21
" mechanism	68	12
Rolls or cases, Shipment of cloth in	69	27
Roofs, Mill	87	63
Rooms, Cloth	68	1
" "	69	1
" Supplies for picker and card	89	25
Ropes, Cotton driving	43	38
Roving frames	89	15
" " Production of	89	14
Rowlock arch	87	47
Rugs, Cotton yarns for	43	37
Rule for the production of looms	89	17
" to find the production of reels	92	24
Running or garden bond	87	45

S

	Sec.	Page
Safe bearing values of soils	87	11
Safety valve dead-weight	88	23
" " Lever	88	23
Sand	87	8
" River	87	8
" Virgin, or pit	87	8
Saxon wool spinning system	44	7
Scoured yarns	44	30
Scraping and beating fabrics	68	2
Screw baling press	69	22
Sea-island yarns	43	9
Selection of a mill site	87	1
Selvage, Bad	69	28
Semi-worsted yarns	44	16
Sewing and rolling	68	9
" " " machines	68	9
" cloth	68	2
" machines, Portable	68	20
Sewing, Rolling machines and hand	68	21
Shear grinder	68	34
Shearing and brushing	68	22
" " " machines	68	22
" " " machines, Driving	68	32
" fabrics	68	2
Sheetings	89	3
Shipment of cloth, Foreign	69	26
" " " in rolls or cases	69	27
" Preparation of cloth for	69	22
Shoddy	44	5
" yarns	44	4
Shoeing piles	87	20
Shuttle bobbins	43	24
Silk, Classification of, by raw material	44	22
" Cultivated and wild	44	22
" Parallel and conical tubes of	44	27
" Quill, or filling, bobbin for	44	27
" skeins	44	26
" Spun	44	25
" Thrown	44	24
" Uses of	44	27
" yarn, Cops of	44	26
" " Spools for	44	26
" " Warps of	44	27
" yarns	44	22
" " Classification of, according to the country of origin	44	23
" " Classification of, according to the method of preparation	44	23
" " Classification of, according to forms in which put up	44	26
Simple engines	88	26
Single drawn yarns	43	11
" flake yarns	44	42
" novelty yarns	44	42
" reeling	92	13
" yarns	44	36
Sisal	43	44
Site, Selection of a mill	87	1
Size of bricks	87	32
" " mills	89	4
Skein-dyed yarn	44	29
Skeining	92	12
Skeins, Banding	92	16
" of cotton yarn	43	28
" " linen yarn	43	41
" " worsted yarn	44	18
" Silk	44	26
Slack reeling	92	23
Slashers	89	15

Digitized by Google

	Sec.	Page
Slide-valve engine	88	28
Sliver-dyed yarn	44	29
Slivers, Hank of card	89	6
Slow-burning mill construction	87	54
" traverse drum winder	93	31
Slubbers	89	12
" Production of	89	13
Slubbing-dyed yarn	44	29
Slub-dyed yarn	44	29
Slubs	44	47
"	69	29
Slugs	69	29
Smashes	69	28
Soft bales of yarn	92	27
Soil, Alluvial	87	9
" Character of	87	5
" Virgin	87	7
Soils, Bearing value of foundation	87	10
" Marshy	87	8
" Safe bearing values of	87	11
Solids	44	37
Special motions	92	17
Spindles	93	21
Spindle winders	93	17
Spinning and carding	89	12
" " twisting, Classification of yarns according to treatment after	44	28
" frames	89	15
" " Production of filling	89	10
" " Production of warp	89	9
" French	44	14
" supplies	89	28
" system, Belgian wool	44	7
" " Saxon wool	44	7
Spiral yarns	44	45
Spoolers	89	15
Spools	43	27
" Cotton-warp	43	28
" for silk yarn	44	26
" " woolen-warp yarn	44	9
" of linen yarn	43	41
" Worsted	44	18
Spool, Taper	43	27
Sprinkler head, Grinnell	88	75
" heads	88	74
" systems	88	72
Spun silk	44	25
Stairways	87	68
Stamping cloth	68	3
" "	69	19
" machines, Cloth	69	21
Steam engines	88	26
Steam gauge	88	24
" heating, Direct system of	88	53
" " Indirect system of	88	60
" " with exhaust	88	54
" " " live	88	54
" power	88	2
Stem fibers, Yarns from	43	39
Stirling boiler	88	16
Stitching mechanism	68	15
Stock-dyed yarn	44	29
Stone and concrete footings	87	13
" footings on piles	87	21
" Quarry-faced	87	53
" Rock-faced	87	53
" rubble foundation walls	87	23
" trimmings	87	53
Stop-motions	92	19
" "	93	11
" "	93	22
Strength and quality of brick	87	32
" of columns	87	61
Stretching bond	87	43
Supplies for drawing and fly frames	89	28
" " hose houses	89	30
" " picker and card rooms	89	25
" " repair shop	89	29
" " weaving	89	29
" Fuel and mill	87	4
" Mill	89	25
" Miscellaneous	89	30
" Spinning	89	28
Supply, Water	87	4
Surat yarns	43	10
Swift of a reel	92	6
Switchboard	88	66
System, Belgian wool spinning	44	7
" Saxon wool spinning	44	7
Systems, Sprinkler	88	72

T

Table of capacity of underwriters' pumps	88	71
" " cost of machinery for a mill	89	21
" " hank of card slivers	89	6
" " hank of laps	89	6
" " machines and floor space for a mill	89	19
" " production of filling spinning frames	89	10
" " production of intermediate frames	89	14
" " production of roving frames	89	14
" " production of slubbers	89	13
" " production of warpers	89	16

Digitized by Google

	Sec.	Page
Table of production of warp spinning frames	89	9
" " safe bearing values of soils	87	11
" " strength of columns	87	61
" " thickness of foundation walls	87	23
" " thickness of mill walls	87	35
Taper bobbins	43	27
" spool	43	27
Tapes, Parallel ply	43	39
Tension controller, Yarn guide and	93	20
Thick places in cloth	69	29
Thickness of brick walls	87	33
" of foundation walls	87	23
" of mill walls	87	35
Thin pieces in cloth	69	29
Thread	43	37
Throstle bobbins	43	22
" yarns	43	12
Thrown silk	44	24
Tibet or cashmere yarns	44	22
Ticketing cloth	68	3
Timber footings	87	11
" " on piles	87	21
Tinsel cords	44	50
" yarns	44	50
Togglejoint baling press	69	22
Top-dyed yarn	44	29
Total cost of mill	89	20
Tram yarn	44	24
Transportation facilities and market	87	3
Traverse and measuring motions	92	17
" guide	93	20
" motion, Center	93	8
" " End	93	14
" " of reels	92	8
Trimmer, Cloth	69	1
" Driving arrangement of cloth	69	4
Trimming-and-inspecting machines	69	1
Trimmings, Stone	87	53
Triple expansion engines	88	26
Tubes and cones for woolen yarn	44	10
" " " of linen yarn	43	41
" of silk, Parallel and conical	44	27
" " worsted yarn, Parallel and conical	44	19
" " yarn, Conical and parallel	43	33
Tube winders, Management of	93	26
" winding	93	1
Tubular boiler, Return	88	9
Turbine, McCormick	88	49
" New American	88	50
Turbines, Examples of water	88	47
" Regulating	88	43
" Water	88	41
Twist corkscrew yarns	44	48
" Knickerbocker mock	44	43
Twister bobbins	43	23
Twisting and spinning, Classification of yarns according to treatment after	44	28
Twists	44	39
" Diamond	44	50
" Knotted or bourette	44	49
Two-ply flake yarns	44	46
Tying yarn	92	14
Types of mill	89	2
" " water turbines	88	41

U

Uncombed worsted yarns	44	14
Underwriters' pump	88	70
Universal winder	93	17
Upholstery yarns	43	37
Uses of silk	44	27

V

Value of soils, Bearing	87	10
Valve, Dead-weight safety	88	23
" Lever safety	88	23
Variations in construction of reels	92	22
Varieties of yarn resulting from coloring	44	36
Vegetable fibers	43	4
" " Yarns from	43	1
Ventilating mills	88	53
Ventilation of mills	88	62
Vicugna yarns	44	22
Vigogne yarns	44	6
Virgin, or pit, sand	87	8
" soil	87	7

W

Walls, Carrying up the	87	46
" Foundation	87	23
" Joining new to old	87	46
" Openings in brick	87	47
" partly on rock, Foundation	87	26
" Stone-rubble foundation	87	23
" Thickness of brick	87	33
" " " foundation	87	23
" " " mill	87	35
Warp bobbins	43	21
" dyed yarn	44	29
" preparation	89	15
" "	89	28
" reeling	92	12
" spinning frames, Production of	89	9

Digitized by Google

	Sec.	Page
Warp yarn, Spools for woolen	44	9
Warpers	89	15
Warps, Beam	43	29
" "	44	10
" of silk yarn	44	27
" Worsted beam	44	19
Waste-cotton yarns	43	13
Water feed-apparatus	88	18
" in heating systems, Condensation	88	54
" power	88	40
" supply	87	4
" " and plumbing	88	78
" tube boilers	88	12
" turbines	88	41
" " Examples of	88	47
Weaving and cloth finishing	89	17
" Supplies for	89	29
" yarns	43	34
" " Back winding for	93	31
Weighted and dyed yarns	44	29
Wild and cultivated silk	44	22
Winder, Pirn	93	31
" Slow-traverse drum	93	31
" Universal	93	17
Winders, Management of tube	93	26
" Quick-traverse drum	93	3
" Spindle	93	17
Winding	93	1
" drums, Driving the	93	7
" for weaving yarns, Back	93	31
" machine, Quill	93	31
" machines, Method of driving	93	25
" " Miscellaneous	93	32
" Tube	93	1
Windows, Mill	87	67
" "	88	63
Wire yarns	44	27
Wiring for electric lights	88	67
Woolen and worsted ply yarns	44	19
" and worsted yarns	44	1
" and worsted yarns classified according to size	44	20
" and worsted yarns, Raw material for	44	2
" warp yarn, Spools for	44	9
" yarn, Cones and tubes for	44	10
" yarns classified according to forms in which put up	44	8
" yarns classified according to raw material	44	4
" yarns classified according to their use	44	11
Woolen yarns classified according to the method of manufacture	44	6
" yarns, Pure	44	4
Wool spinning process	44	7
Worsted and woolen ply yarns	44	19
" and woolen yarns	44	1
" and woolen yarns classified according to size	44	20
" and woolen yarns, Raw material for	44	2
" beam warps	44	19
" bobbin	44	16
" cop	44	18
" mixture yarn	44	16
" spools	44	18
" yarn, Parallel and conical tubes of	44	19
" yarn, Skeins of	44	18
" yarns classified according to form in which put up	44	16
" yarns classified according to method of manufacture	44	11
" yarns classified according to raw material	44	3
" yarns classified according to use	44	19
" yarns made on the Bradford system	44	13
" yarns, Prepared	44	12
" yarns, Uncombed	44	14
Worsteds, French-spun	44	14

Y

Yarn, Baling	92	33
" Balls of linen	43	41
" Beams of linen	43	41
" Bobbins of linen	43	41
" Bundles of	92	31
" Carded	43	12
" Chains of	43	30
" Classification of	43	2
" Combed	43	12
" Cones and tubes for woolen	44	10
" Conical and parallel tubes of	43	33
" Conical and parallel tubes of worsted	44	19
" Cop-dyed	44	29
" Cops of silk	44	26
" Folded	43	14
" guide and tension controller	93	20
" holder	93	20
" Mercerized	44	31
" Organzine	44	24

Digitized by Google

	Sec.	Page
Yarn, Passage of	93	17
" " "	92	2
" " "	93	7
" Pirns of linen	43	41
" Pressed bales of	92	27
" Skein-dyed	44	29
" Sliver-dyed	44	29
" Slubbing-dyed	44	29
" Slub-dyed	44	29
" Spools for woolen warp	44	9
" Stock-dyed	44	29
" Top-dyed	44	29
" Tram	44	24
" Tying	92	14
" Warp-dyed	44	29
" Warps of silk	44	27
" Worsted mixture	44	16
Yarns	43	1
"	44	1
" Allan-seed	43	9
" Alpaca	44	21
" Asbestos	44	27
" Back winding for weaving	93	31
" Baling and bundling reeled	92	26
" Bead	44	45
" Bleached	44	29
" Bleaching	44	29
" Bouclé	44	49
" Brilliant	44	50
" Bunch	44	47
" Carpet	43	36
" Cashmere or Tibet	44	22
" Chinese and Japanese	43	10
" Classification of	43	8
" Classification of, according to material	43	4
" Classification of, according to treatment after twisting and spinning	44	28
" Classification of cotton, according to counts	43	16
" Classification of cotton, according to form in which put up	43	17
" Classification of cotton, according to preparation and appearance	43	11
" Classification of cotton, according to use	43	34
" Classification of silk, according to country of origin	44	23
" Classification of silk, according to method of preparation	44	23
Yarns, classified according to the form in which put up, Linen	43	40
" classified according to form in which put up, Silk	44	26
" classified according to form in which put up, Woolen	44	8
" classified according to form in which put up, Worsted	44	16
" classified according to method of manufacture, Worsted	44	11
" classified according to raw material, Woolen	44	4
" classified according to raw material, Worsted	44	3
" classified according to method of preparation, Linen	43	40
" classified according to use, Woolen	44	11
" classified according to use, Worsted	44	19
" classified according to method of manufacture, Woolen	44	6
" classified according to use, Linen	43	42
" Combinations of novelty	44	50
" Condensed	43	14
" Conditioning	44	34
" Cones and tubes of linen	43	41
" Converted	44	28
" Corkscrew	44	44
" Cotton	43	8
" Crêpe, or extra-hard	44	44
" Curl	44	49
" Damping	44	34
" Drawn and condensed	43	2
" Dyed and weighted	44	29
" Egyptian	43	9
" for converting	43	36
" " cordage	43	37
" " export	43	36
" " rugs, Cotton	43	37
" from American cotton	43	9
" " animal fibers	44	1
" " leaf fibers	43	44
" " mineral fibers	44	27
" " stem fibers	43	39
" " vegetable fibers	43	1
" Gassed, or Genapped	44	33
" Gimp	44	46
" Glass	44	28
" Glazed and polished	44	32
" Half-worsted	44	16

Digitized by Google

	Sec.	Page
Yarns, Hemp	43	42
" Intermittent	44	38
" Jute	43	43
" Knickerbocker	44	43
" Knitting	43	35
" Knotted or bourette	44	48
" Linen	43	39
" Loop	44	49
" made on the Bradford system, Worsted	44	13
" made on the French system	44	14
" Mixture	44	6
" Mock twist	44	39
" Mohair	44	21
" Mule-spun	43	12
" Novelty	44	40
" Part-wool	44	5
" Peeler	43	9
" Peruvian cotton	43	10
" Ply	43	14
" "	44	39
" " crêpe	44	48
" " flake	44	46
" " novelty	44	44
" Prepared	44	33
" " worsted	44	12
" Preparing	44	33
" Printed	44	32
" Processed	44	34
" produced from hair	44	21
" Pure woolen	44	4
" Ramie	43	43
Yarns, Random	44	38
" Raw material for	44	2
" Ring-spun	43	12
" Scoured	44	30
" Sea-island	43	9
" Shoddy	44	4
" Silk	44	22
" Single	44	36
" " drawn	43	11
" " flake	44	42
" " novelty	44	42
" Skeins of cotton	43	28
" " " linen	43	41
" " " worsted	44	18
" Soft bales of	92	27
" Spiral	44	45
" Spools of linen	43	41
" Surat	43	10
" Throstle	43	12
" Tinsel	44	50
" Twist corkscrew	44	48
" Two-ply flake	44	46
" Uncombed worsted	44	14
" Upholstery	43	37
" Vicugna	44	22
" Vigogne	44	6
" Waste-cotton	43	13
" Weaving	43	34
" Wire	44	27
" with special characteristics	44	28
" Woolen and worsted	44	1
" " " " ply	44	19

Digitized by Google

Digitized by Google

168 08/00
7002 BUI 95
ICI INFORMATION CONVERSATION
Digitized by Google

Digitized by Google

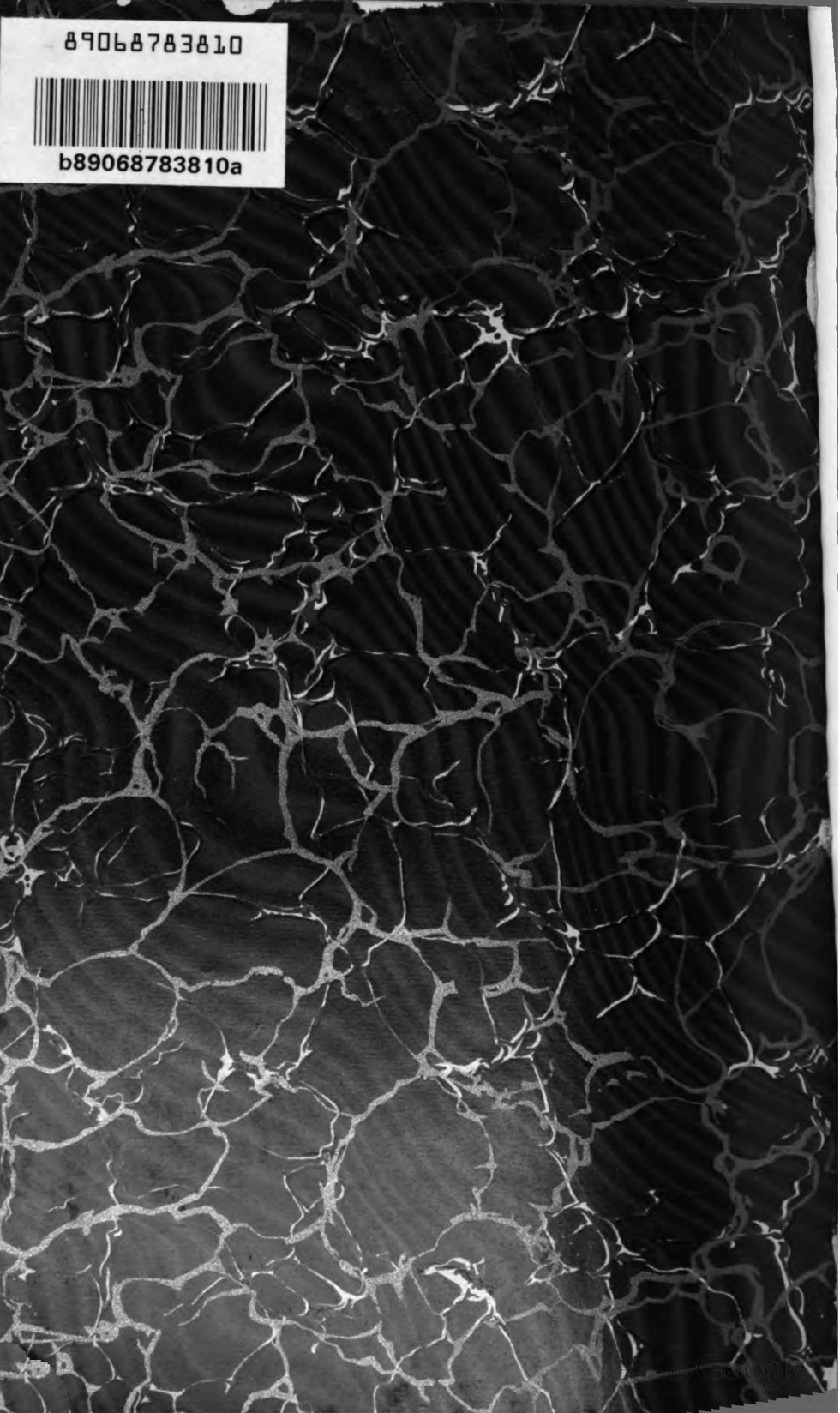
89068783810
b89068783810a

Digitized by Google

89071909295

b89071909295a

Digitized by Google

DEMCO

K.F. WENDT LIBRARY
UW COLLEGE OF ENGR.
215 N. RANDALL AVENUE
MADISON WI 53706

Digitized by Google

89071909295

B89071909295A